CUENOD

SPARE PARTS EXPLODED VIEW
OIL BURNER
Model
C160 H201

R8220052-01 - 27/04/2016

EN	FR	IT	ES	DE	NL

C160 H201

Oil burner

Col	Reference	Model type	Begin	End
1	13005337	BB-C160 H201	08-2000	09-2012
2	13005119	CH-O721 - T1/KN	08-2000	06-2013
3	13005120	CH-O721 - T2/KL	08-2000	10-2012
4	13005121	CH-O721 - T3/KM	08-2000	10-2012

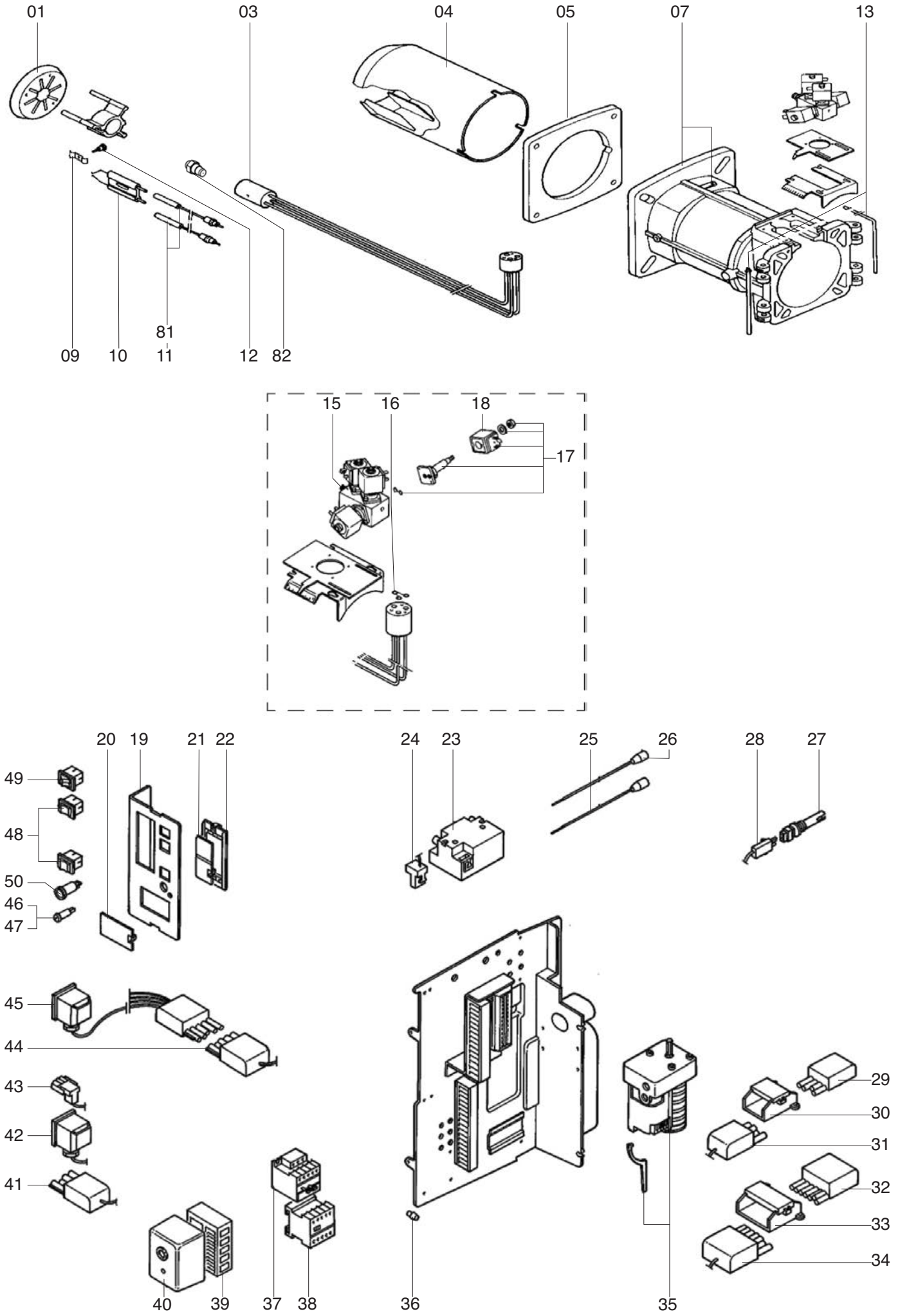
01
03
04
05
07
13
09
10
81
11
12
82
15
16
18
17
20
19
21
22
24
23
25
26
28
27
49
48
50
46
47
45
44
43
42
41
29
30
31
32
33
34
40
39
37
38
36
35

R8224665

	Description	Manf. Pt. N	Type	BB-C160 H201	CH-OT21 - T1/KN	CH-OT21 - T2/KL	CH-OT21 - T3/KM																	31	
				1	2	3	4	5	6	7	8	9	10	11	12	13	14	15	16	17	18	From	to
0001	BAFFLE PLATE D168/50 8SL	13009751			●	●	●																
0003	NOZZLE ROD 2 TUBES L526 SHORT HEAD	13009754			●																		
	NOZZLE ROD 2 TUBES L626 MEDIUM HEAD	13009756					●																
	NOZZLE ROD 2 TUBES L726 LONG HEAD	13009755				●																	
0004	FLAME TUBE D227/172/190 L343	13009760			●																		
	FLAME TUBE D227/172/190 L443	13009762					●																
	FLAME TUBE D227/172/190 L543	13009761				●																	
0005	GASKET/BURNER FLANGE 335X326X3 D250	13009719			●	●	●																
0007	BURNER TUBE SCREW FIX. KIT (X3)	13009723			●	●	●																
0009	FLANGE 20X11X2,6 FIX. ELECTRODE	13009725			●	●	●																
0010	ELECTROD.BLOC.27X55 d6,4 D2X23 45°+SCREW	13009726			●	●	●																
0011	IGNITION CABLE D6,35/D6,35 L950 X2 HEAD	13009727			●	●	●																
0012	WASHER HEAD SCREW M4/ELECTRODES BLOCK	13010049			●	●	●																
0013	SPINDLE/HINGE BODY-HEAD D12X210+D12X83	13009724			●	●	●																
0015	OIL HYDRAULIC BLOCK 2 STAGES	13009810			●	●	●																
0016	O-RING D6X2	13009812			●	●	●																
0017	LUC ELECTRO VALVE 121F63 2/2NF9W	13009813			●	●	●																
0018	LUCIFER COIL 9W	13009814			●	●	●																
0019	CONTROL BOARD	13009660		●																			
0020	TRANSLUCENT SHUTTER/CONSOLE	13009790		●																			
0021	SHUTTER/CONSOLE	13009661		●																			
0022	LOAD CONTR. SUPPORT	13009662		●																			
0023	IGNITION TRANSFORMER EBI 2X7.5 230V	13009663		●																			
0024	CABLE IGNIT.TRANSFO+PLUG 2P 2X0,75 L420	13009773		●																			
0025	IGNITION CABLE BERU D6,35/D4 L750X2 BODY	13009743		●																			
0026	ROUND CONNECTOR CABLE ALU.ION X2	13010068		●																			
0027	PHOTOCELL MZ 770 S	13009774		●																			
0028	CABLE CELL MZ+PLUG2P/2X0,75 L450	13009775		●																			
0029	WIELAND CONNECTOR 4P.MALE	13009667		●																			
0030	HOOD/WIELAND PLUG 4P.ST18/4	13009668		●																			
0031	CABLE REGUL.+PLUGWIE. 4P 4X0,75 L620	13011515		●																			
0032	WIELAND PLUG 7P.	13010523		●																			
0033	HOOD/WIELAND PLUG 7P	13009671		●																			
0034	CABLE+PLUG 7P/7X0,75 L620	13009672		●																			
0035	ACTUATOR SQN 31.151 A2766	13009776		●																			
0036	RUBBER CAP/IGNITION CABLE	13009625		●																			
0037	THERMAL RELAY LR2K 5.5-8.0A	13009746		●																			
0038	CONTACTOR	13009778		●																			
0039	CONTROL BOX BASE	13009780		●																			
0040	CONTROL UNIT SH 213 C1	13011049		●																			
0041	CABLE MOTOR+PLUG WIE. 4P 4X1,5 L600	13009782		●																			
0042	CABLE AIR P.SWITCH+PLUGDIN/3X0,75 L1450	13009783		●																			
0043	CABLE MOTOR GMP+PLUG 3P. L1700	13009800		●																			
0044	CABLE+PLUG 5P./SOLENOID VALVE	13009785		●																			
0045	CABLE SOL.VALVE+DIN/WIE.5PL1500VS+V1+V2	13009786		●																			
0046	FUSE HOLDER + FUSE 6.3A	13016457		●																			
0047	FUSE 5X20 6.3A	13016028		●																			
0048	3 POS SWITCH	13009683		●																			
0049	SWITCH LIGHT 2 POSITION	13009787		●																			
0050	RESTART PUSH BUTTON	13009788		●																			
0081	ROUND CONNECTOR CABLE ALU.ION X2	13010056			●	●	●																
0082	NOZZLE DAN 10,0GPH 60° B	13016049			●	●	●																

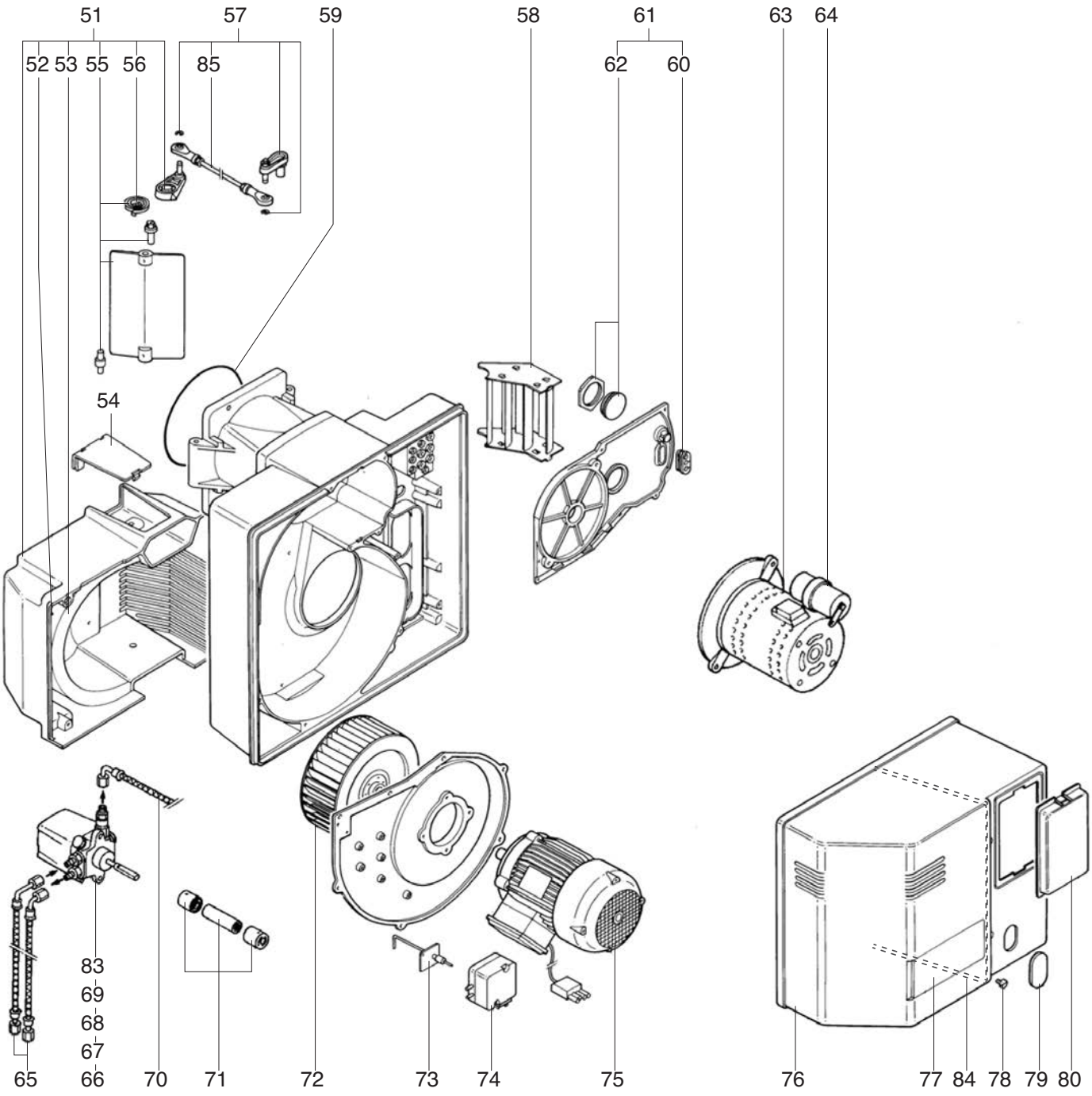
51
57
59
58
61
63
64
52
53
55
56
85
62
60
54
83
69
68
67
65
66
70
71
72
73
74
75
76
77
84
78
79
80

R8224666

	Description	Manf. Pt. N	Type	BB-C160 H201	CH-O721 - T1/KN	CH-O721 - T2/KL	CH-O721 - T3/KM																	31 From	to
				1	2	3	4	5	6	7	8	9	10	11	12	13	14	15	16	17	18				
0051	AIR DAMPER	13009767		●																					
0052	GASKET/CASING AIR109X6X7 PROFILE	13009640		●																					
0053	AIR BOX INSULATION	13009641		●																					
0054	AIR BOX COVER	13009642		●																					
0055	AIR FLAP WITH FITTINGS	13014117		●																					
0056	SPRING/AIR FLAP RED	13011507		●																					
0057	CARDAN EQ./AIR FLAP	13000970		●																					
0058	AIR RECTIFIER 148/162 4BL.	13009748		●																					
0059	GASKET/HOUSING-HEAD D218X8/5X10	13010055		●																					
0060	CABLE GROMMET	13009648		●																					
0061	FLAME MONITORING COVER W/FITTINGS	13014118		●																					
0062	INSPECTION GLASS	13010008		●																					
0063	MOTOR 0.45KW230V D12.7 GMP	13009807		●																					
0064	CAPACITOR 12µF	13015715		●																					
0065	FUEL HOSE L 1.5M	13009815		●																					
0066	FUEL OIL PUMP AJ6 CC 1004	13009802		●																					
0067	PUMP FILTER AJ6	13014194		●																					
0068	GASKET/COVER-PUMP SUN AJ	13014193		●																					
0069	CONNECTOR/HOSE G1/4/M16X1,5	13014419		●																					
0070	HOSE M14X1.5X2 L1300	13009809		●																					
0071	MOTOR/PUMP COUPLING H-B	13009806		●																					
0072	FAN WHEEL D240X114 d24	13009736		●																					
0073	PRESSURE TAP	13009738		●																					
0074	AIR PRESS. SWITCH LGW 3 A2 0.4-3MB DIN	13010111		●																					
0075	MOTOR 2.2KW230/400V D24+PLUG	13009739		●																					
0076	COVER C70...210	13015646		●																					
0077	PRINTED FRONT PLATE C160	13016417		●																					
0078	HOOD MOUNTING SCREW	13009657		●																					
0079	CAP / COVER	13009742		●																					
0080	HOOD COVER	13009659		●																					
0083	CONNECTOR/HOSE G1/8/M14X1,5	13014676		●																					
0084	GASKET/COVER-LEAK 10X3	13009772		●																					
0085	CARDAN ROD	13009769		●																					

[illegible]ES

[illegible]n

[illegible]ZZATE

[illegible] /
[illegible]en

[illegible]a
[illegible]en

[illegible] /
[illegible] /
[illegible]g

[illegible]

[illegible]

[illegible]s : [illegible]A

Fortlaufende Gerätenummer

[illegible]D

[illegible] → 2003 → K → 2003
LL → 2004 → L → 2004
MM → 2005 → M → 2005
etc. ... etc. ...

[illegible]s : [illegible]09

Fortlaufende Gerätenummer

[illegible]

[illegible] → 2003 → K → 2003
LL → 2004 → L → 2004
MM → 2005 → M → 2005
etc. ... etc. ...

[illegible]s : [illegible]07

Anno di fabbricazione

[illegible]

[illegible] → P → 2007
[illegible] → R → 2008
Gerätenummer
SS → S → 2009
TT → T → 2010
UU → U → 2011
WW → W → 2012
XX → X → 2013
YY → Y → 2014
ZZ → Z → 2015

[illegible]guidance
[illegible]de
[illegible]nehmen.