CUENOD

SPARE PARTS EXPLODED VIEW
GAS BURNERS
Model
CB-FC12, FC16 GX107/8

R8220256-01 - 02/05/2018

EN	FR	IT	ES	DE	NL

Col	Reference	Model type	Begin	End
1	3832660	CB-FC12 GX107/8 P20 300 D3/4 -RP3/4 TC	12-2012	-
2	3832066	CB-FC16 GX107/8T P20-300 D3/4 -RP3/4 TC	01-2013	-

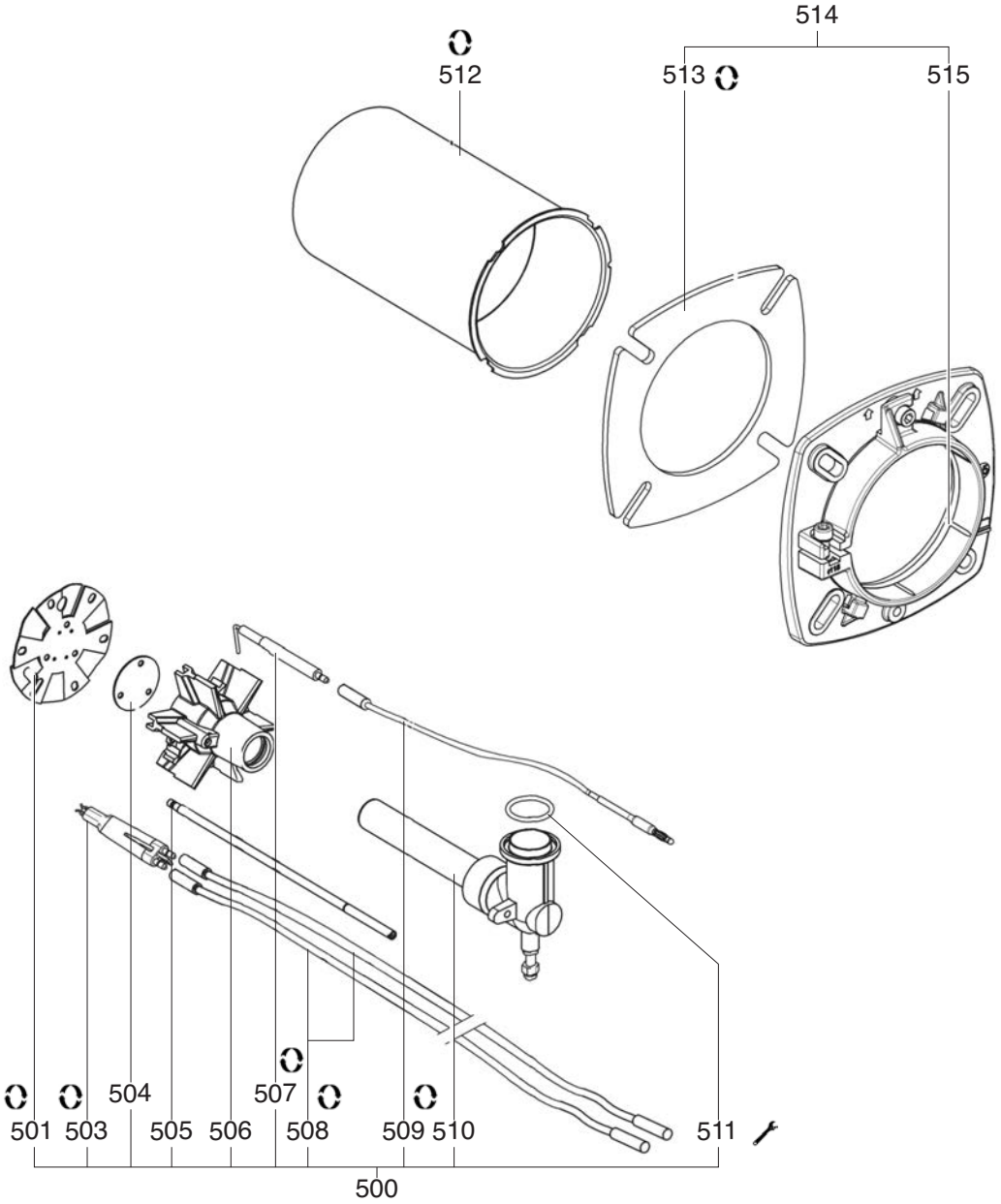
514
512
513
515
504
507
501
503
505
506
508
509
510
511
500

	Description	Manf. Pt. N	Type	FC12 GX107/8 T1	FC16 GX107/8 T1	3	4	5	6	7	8	9	10	11	12	13	14	15	16	17	18	From	to
				1	2																		
0500	GAS LINE WITH FITTINGS T1/KN	65300983		●	●																		
0501	BAFFLE PLATE D87 6SL R 8DRIL.	65300320		●	●																		
0503	ELECTRODE BLOCK 12X46 D4 D1,2X10	65300738		●	●																		
0504	SHUTTER D40 3 DRILL.D4,2 ON D30 LPG	13012402		●	●																		
0505	ADJUST ROD D6 L238 M6/D5	65300322		●	●																		
0506	GAS HEAD L70 D84/22 +O-RING 6 BRANCH.	65300321		●	●																		
0507	IONISATION PROBE D8X80 D4 D2X27 80° F+S	13010529		●	●																		
0508	IGNITION CABLE d2,8 D4/D4 L300	65300323		●	●																		
0509	IONISATION CABLE D4 BAN/D4 L350	13013525		●	●																		
0510	GAS INLET TUBE+ELBOW T1/KN	65300325		●	●																		
0511	O-RING D30X3 (X10)	65300001		●	●																		
0512	FLAME TUBE D100/88 L195	65300317		●																			
	FLAME TUBE D115/88 L195	65300318			●																		
0513	GASKET 176X176 D115 2°/BOILER FLANGE	13021414		●	●																		
0514	BOILER ACCESSORY D100 EUROFLANGE	13023304		●																			
	BOILER ACCESSORY D115 EUROFLANGE	13018134			●																		
0515	GASKET/BRAID D115X5X5-377	13020517		●	●																		

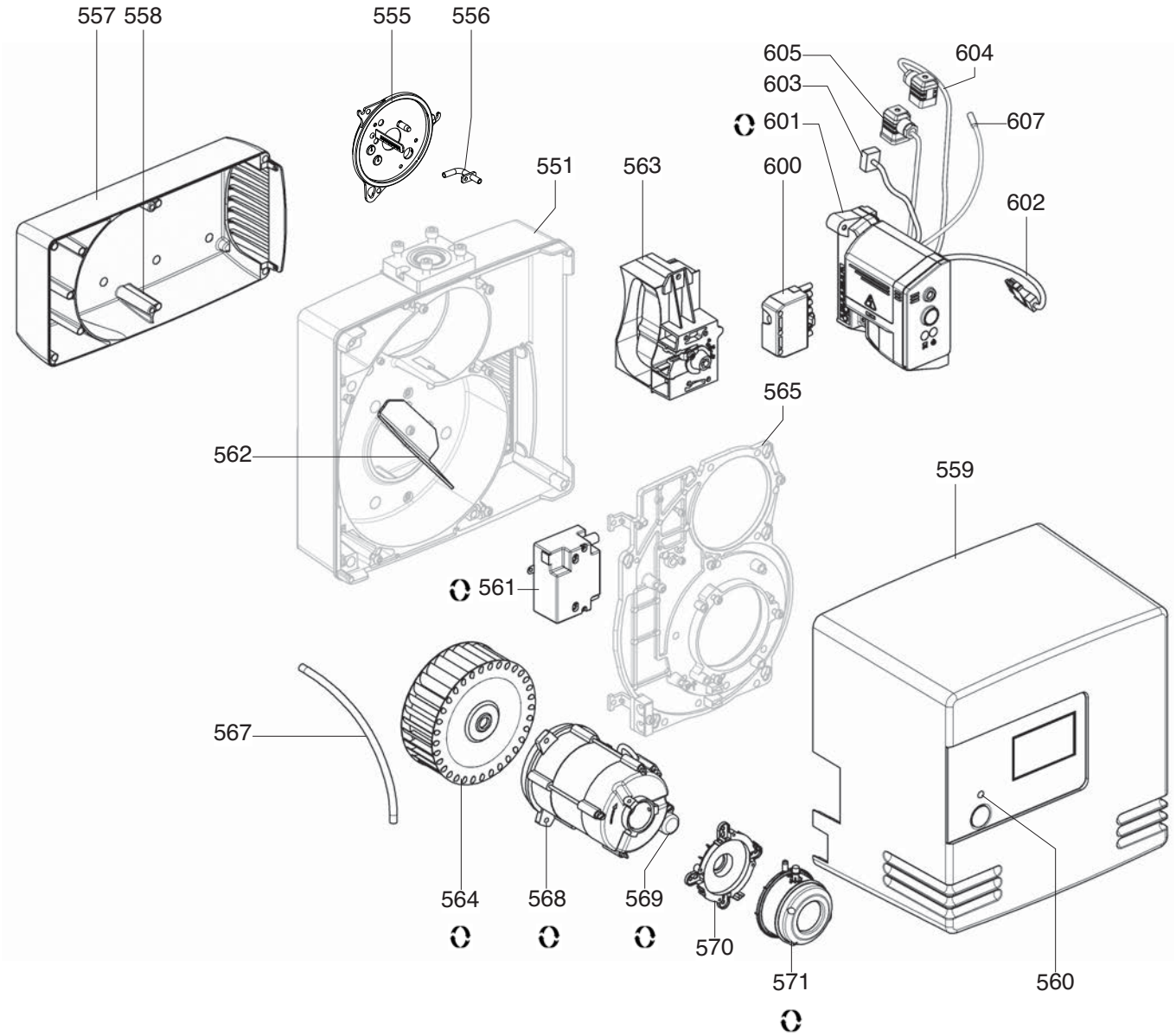
557
558
555
556
605
604
603
601
607
551
563
600
602
565
562
559
561
567
564
568
569
570
571
560

	Description	Manf. Pt. N	Type	FC12 GX107/8 T1	FC16 GX107/8 T1	3	4	5	6	7	8	9	10	11	12	13	14	15	16	17	18	From	to
0551	HOUSING NC12…21/VECTRON 2	65300944		●	●																		
0555	CABLE GROMMET BLACK D2,3/9	13010058		●	●																		
0556	PRESS. TAKE-OFF TUBE D6 ELBOW H19,5 L24	65327148		●	●																		
0557	AIR BOX 315X164X62+INSULATION	13021733		●	●																		
0558	INSULATION AIR INTAKE BOX	13017369		●	●																		
0559	CAPOT FC12/16 EQUIPE	65300326		●	●																		
0560	FLAT HEAD SCREW M5X15	65300519		●	●																		
0561	IGNITION TRANSFO. EBI 2X7,5 230V	13009663		●	●																		
0562	AIR RECYCLING 109/102X60 78° (METAL)	13023270		●	●																		
0563	AIR FLAP ASSEMBLY	13023775		●	●																		
0564	FAN WHEEL D146 X52 D12,7	13010012		●	●																		
0565	MOTOR PLATE 313X218X18,5 D99 H-B/L-GL	65326439		●	●																		
0567	HOSE FLEXILON D8X6 X 250	65300200		●	●																		
0568	MOTOR 0,1KW 230V D12,7 DRILLED	65327089		●	●																		
0569	CAPACITOR 5µF 2P 3mm	65325038		●	●																		
0570	AIR PRESSURE SWITCH BASE D32	13020723		●	●																		
0571	AIR PRESS.SWITCH 604.91 0,5-5MB+RAST	13020502		●	●																		
0600	WIELAND PLUG 7P SILK-SCREEN PRINTED	13010523		●	●																		
0601	CONTROL UNIT TCG 131.07TC+Pre V.40s	65300319		●	●																		
0602	CABLE MOTOR+PLUG 3P/RAST3P L300	13010519		●	●																		
0603	CABLE IGNIT.TRANSFO+PLUG 2P/RAST2P L350	65300619		●	●																		
0604	CABLE GAS VALVE+PLUG DIN/RAST5P L1500	65300570		●	●																		
0605	CABLE GAS P.SWITCH+PLUG DIN/RAST2P L1500	13023698		●	●																		
0607	IONISATION CABLE MC4/RAST 1P L350	65300158		●	●																		

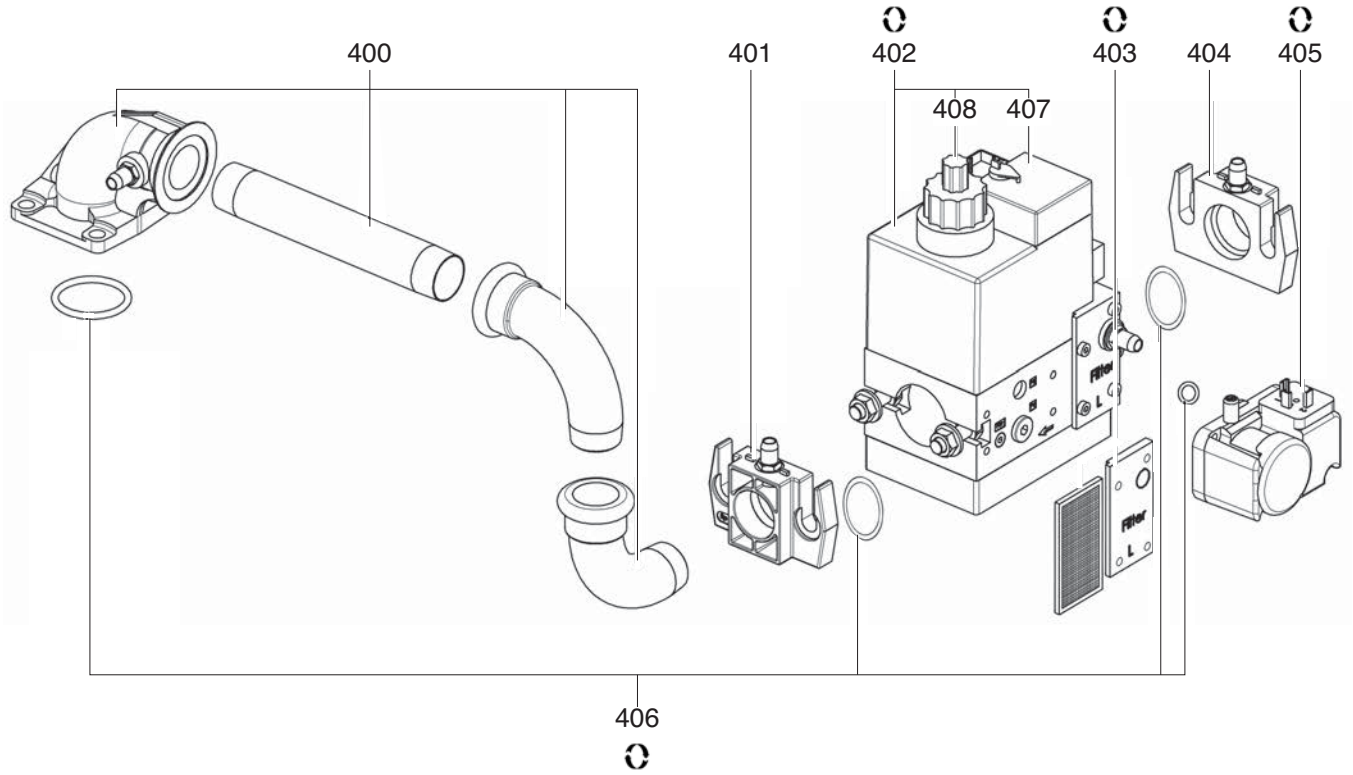
400
401
402
403
404
405
408
407
406

	Description	Manf. Pt. N	Type	FC12 GX107/8 T1	FC16 GX107/8 T1	3	4	5	6	7	8	9	10	11	12	13	14	15	16	17	18	From	to
0400	GAS CONNECTION TUBE	65300327		●	●																		
0401	FLANGE MB405/407 RP3/4 +O-RING	13010074		●	●																		
0402	GAS VALVE MBDLE407 B01 S22 RP3/4"	13023734		●	●																		
0403	STRAINER D20 /MB..405/407	65326948		●	●																	01/17	
	STRAINER MB..405-407	13016011		●	●																		
0404	FLANGE MB405/407 RP3/4 +O-RING	13010074		●	●																		
0405	GAS PRESS.SWITCH GW 10 A5/1 1-10MB DIN	13023736		●	●																		
0406	O-RING D34,5X3,5 SET+GASKET COVER/MB407	13011111		●	●																		
0407	COIL DUN N° 1100 MBDLE405-407	13012423		●	●																		
0408	HYDRAULIC BREAK H13 MB-xxDLE 405-407	13010081		●	●																		

[redacted]ES

[redacted]

[redacted]NIZZATE

[redacted]

[redacted]

[redacted]

[redacted]

[redacted]