CUENOD

SPARE PARTS EXPLODED VIEW
GAS BURNERS
Model
NC4, NC6, NC9 GX107/8

R8220224-03 - 02/05/2019

EN	FR	IT	ES	DE	NL

Col	Reference	Model type	Begin	End
1	13009336	NC4 GX107/8 P20	06-2002	06-2008
2	13009337	NC6 GX107/8 P20	05-2002	06-2008
3	13009306	NC9 GX107/8 P20	05-2002	06-2008

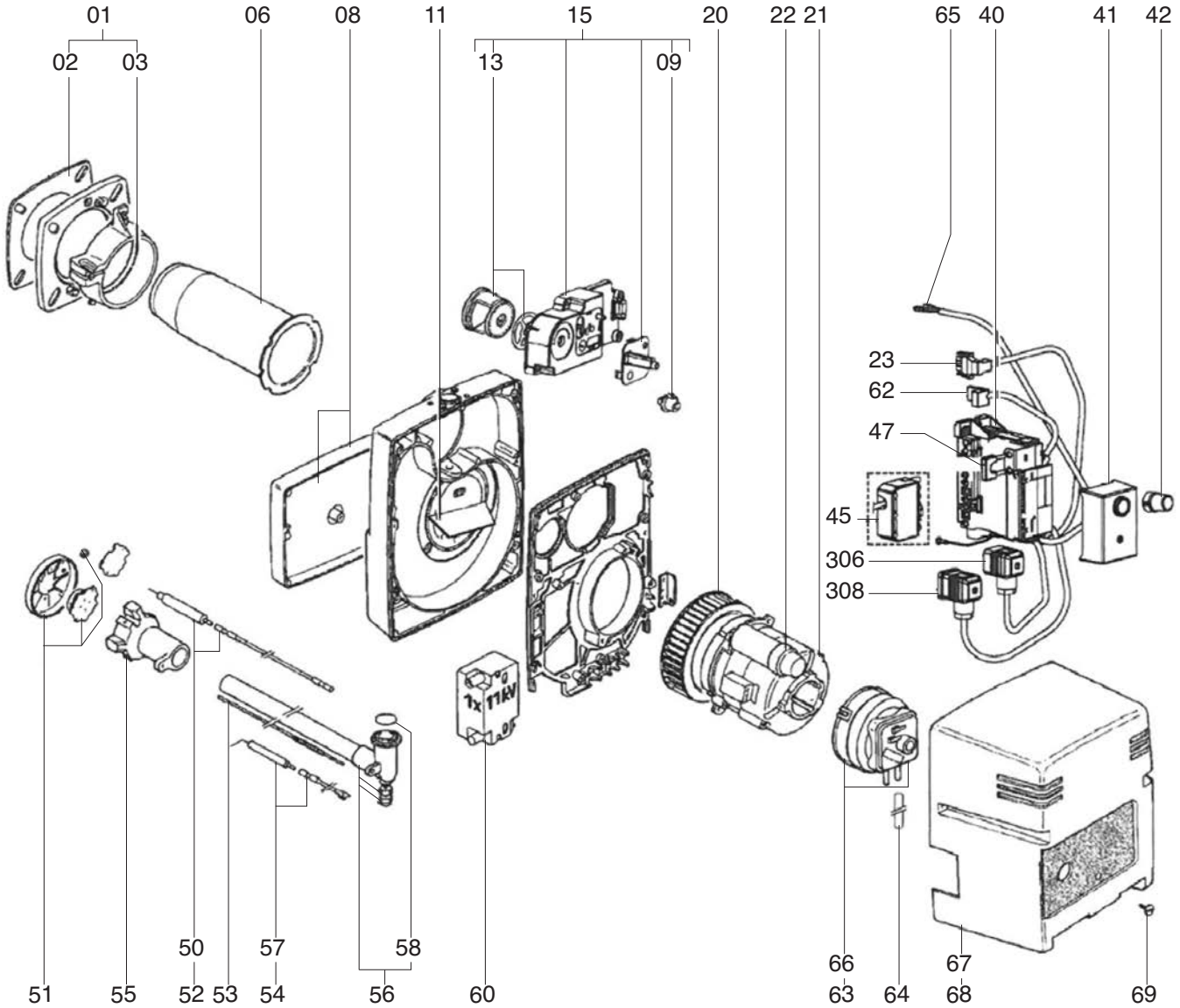
01
02
03
06
08
11
15
13
09
20
22
21
65
40
41
42
23
62
47
45
306
308
50
57
58
51
55
52
53
54
56
60
66
63
64
67
68
69

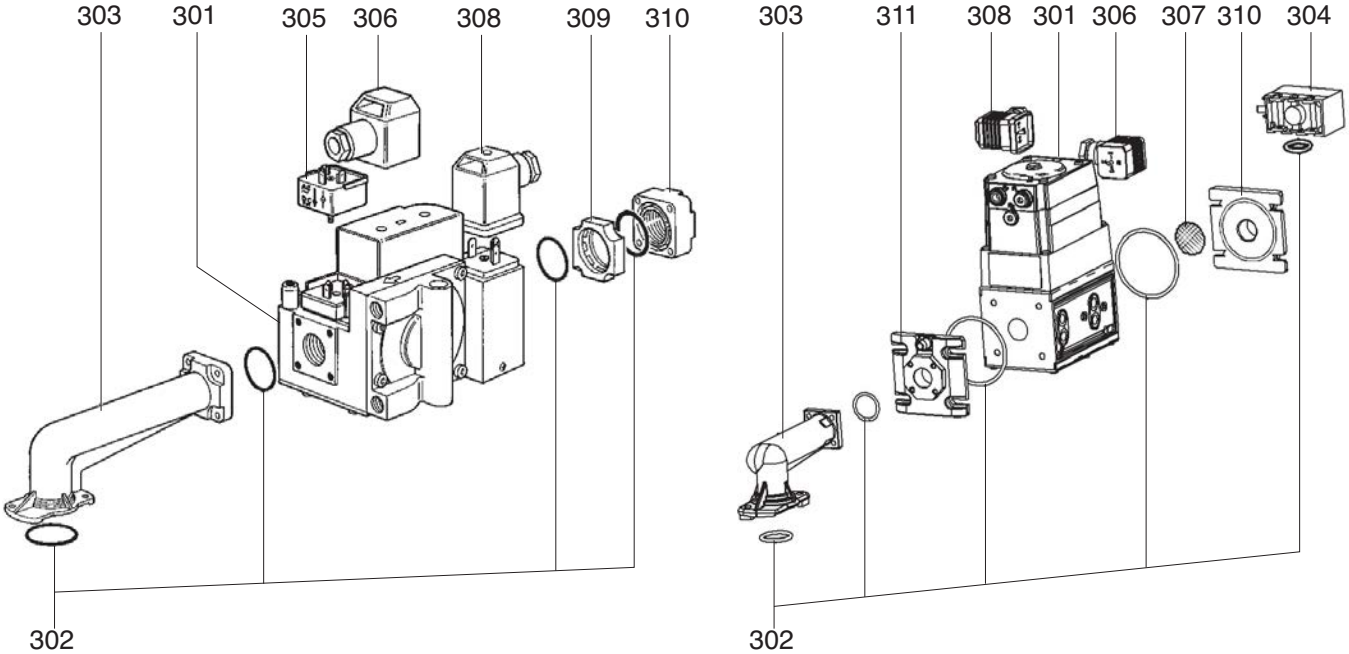
303
301
305
306
308
309
310
302
303
311
308
301
306
307
310
304
302

R8224261

	Description	Manf. Pt. N	Type	NC4 GX107/8 SG113	NC6 GX107/8 SG113	NC9 GX107/8 SG113	4	5	6	7	8	9	10	11	12	13	14	15	16	17	18	From	to
0001	BOILER ACCESSORY D80 EUROFLANGE	13022754		●	●																		
	BOILER ACCESSORY D90 EUROFLANGE	13018849				●																	
0002	GASKET/BURNER FLANGE 156X156X5 D90	13010502				●																	
	GASKET/BURNER FLANGE 156X156X6 D80	13010501		●	●																		
0003	GASKET/BRAID D80X5X5-267	13011148		●	●																		
	GASKET/BRAID D90X5X5-298	13011149				●																	
0006	FLAME TUBE D80/65/58 L193	13007732		●	●																		
	FLAME TUBE D90/75/68 L193	13007733				●																	
0008	SOUND INSULATION / CASING AIR	13019512		●	●																		
	SOUND INSULATION/AIR BOX	13018442				●																	
0009	BUTTON ADJUST FLAP D28,5X28	13010509		●	●	●																	
0011	AIR RECYCLING D103/35 100X95 L39 108°	13010512			●																		
	AIR RECYCLING D103/35 SPO.80X68 L39 108°	13010511		●																			
	AIR RECYCLING D103/45 SPO.100X97 L55 65°	13010513				●																	
0013	AIR FLAP D59/55X30+SPRING	13010515		●	●	●																	
0015	BOX ADJUST FLAP ASS. /GAS	13010473		●	●	●																	
0020	FAN WHEEL D133X42 D10	13010101		●	●																		
	FAN WHEEL D133X62 D10	13010517				●																	
0021	MOTOR 0,085 KW 230V D10	65326740		●	●	●																	
0022	CAPACITOR 3µF 4P 6,4MM	13010520		●	●	●																	
0023	CABLE MOTOR+PLUG 3P/RAST3P L300	13010519		●	●	●																	
0040	ELECTRIC CONNECTION BOX GAS 2ST./SG513	13010521		●	●	●																	
0041	CONTROL UNIT SG 113 C1	13010522		●	●	●																	
0042	BUTTON EXTENSION/RESET CONTROL UNIT	13010964		●	●	●																	
0045	PLUG WIELAND 7P	13009670		●	●	●																	
0047	IONISATION BRIDGE	13010524		●	●	●																	
0050	IGNITION CABLE D4/D4 L380	65300077		●	●	●																	
0051	SET BAFFLE PLATE D64,5 + NOZZLE D45 +CAP	13007726		●	●																		
	SET BAFFLE PLATE D74 + NOZZLE D59 + CAP	13007727				●																	
0052	IGNITION ELECTRODE D6X80 d4 D2X7 FLANGE	13010528		●	●	●																	
0053	ADJUST ROD D4,8 L233 M6/M5+NUT M5X0,8	13010526		●	●																		
	ADJUST ROD D4,8 L255 M6/M5+NUT M5X0,8	13010527				●																	
0054	IONISATION PROBE D8X80 d4 D2X27 80° F+S	13010529		●	●	●																	
0055	GAS HEAD L67 D62/20	65300237		●	●																		
	GAS HEAD L67 D72/22 +O-RING 4 BRANCH.	13010532				●																	
0056	GAS ELBOW+TUBE LG.160	13010533		●	●	●																	
0057	IONISATION CABLE CLP 6,35/D4 L500	13010530		●	●	●																	
0058	O-RING D24X3	13010534		●	●	●																	
0060	IGNITION TRANSFO.EBI 1X11 230V+EARTH CO.	65300715		●	●	●																	
0062	CABLE IGNIT.TRANSFO+PLUG 3P/RAST 2P L250	13010535		●	●	●																	
0063	AIR PRESS.SWITCH 604.92 1-10MBSAV LGW10	65300017		●	●	●																	
0064	SILICON HOSE D8/4X150	12001953		●	●	●																	
0065	CABLE AIR P.SWITCH+RAST2P/FAST.6,3 L200	13010537		●	●	●																	
0066	HOLDER PRESSURE SWITCH LGWC	13003919		●	●	●																	
0067	STANDARD FRONT COVER.NC4	13010540		●	●	●																	
0068	COVER GREY 229X282X175/NC4-6-9 EQ.	13015666		●	●	●																	
0069	OVAL HEAD SCREW/FIX COVER	13007853		●	●	●																	
0300	GAS VALVE																						
0301	GAS VALVE CG10 R70 D1T5WZ	13010541		●	●																		
	GAS VALVE CG15 R03 D2W5 +FLANGE	13010542				●																	
0302	O-RING KIT D24X3+ D22X2,5 (3)/CG10	13010543		●	●																		
	O-RING KIT D24X3+D22X2,5+D7X2/CG15	13010961				●																	
0303	GAS CONNECTION L115	13010952		●	●	●																	
0304	GAS PRESS.SWITCH DG 45 10-45MB	13010960		●	●	●																	
0305	SUPPLY RECTIFIER VALVE CG10(AC=DC/BO)	13010544		●	●	●																	
0306	CABLE GAS VALVE+PLUG DIN/RAST 3P L1500	13010545		●	●	●																	
0307	STRAINER 76X76 /VALVE CG15	13010966				●																	
0308	CABLE GAS P.SWITCH+PLUG DIN/RAST3P L1500	13010080		●	●	●																	
0309	STRAINER+SPACER+2 O-RING/CG10	13010547		●	●																		
0310	FLANGE CG10 RP1/2	13010548		●	●																		
	FLANGE CG15 RP1/2	13010968				●																	
0311	FLANGE CG15 RP1/2	13010968				●																	

[illegible]ES

[illegible]

[illegible]NIZZATE

[illegible]

[illegible]

[illegible]

Fortlaufende Gerätenummer

Fortlaufende Gerätenummer

Fortlaufende Gerätenummer

[illegible] guidance [illegible] de [illegible] Produktmaterialien Produktprodukts nehmen.