CUENOD

SPARE PARTS EXPLODED VIEW
DUAL-FUEL BURNERS
Model
CB-NC12-21-B1A

R8220017-01 - 04/02/2015

EN	FR	IT	ES	DE	NL

CB-NC12-21-B1A

Dual-Fuel burner

Col	Reference	Model type	Begin	End
1	3833492	CB-NC12 B117A d3/4”-Rp3/4” T2	07-2011	-
2	3833493	CB-NC21 B117A d3/4”-Rp3/4” T2	07-2011	-

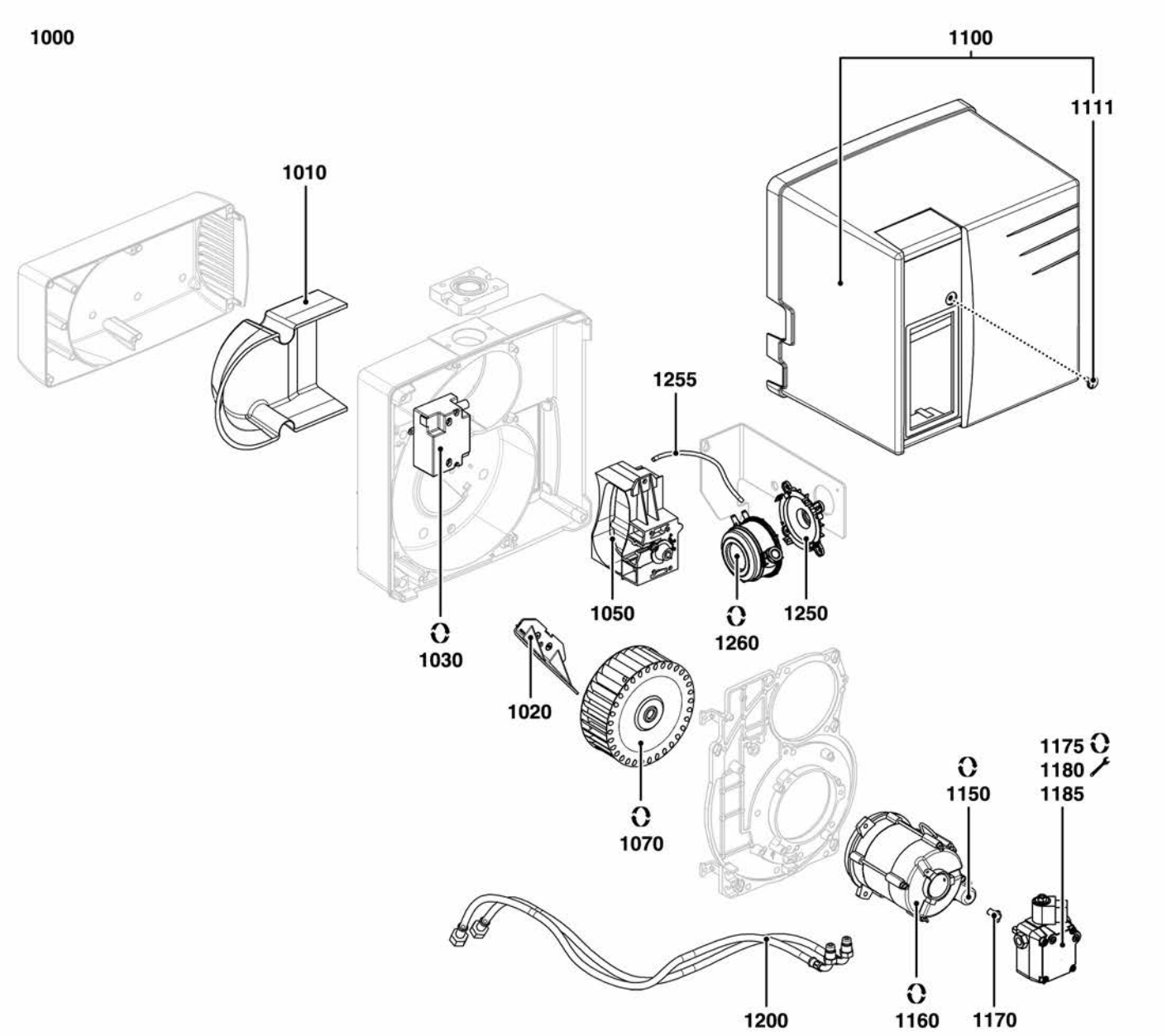
1000
1100
1111
1010
1255
1050
1250
1260
1030
1020
1070
1175
1180
1185
1150
1200
1160
1170

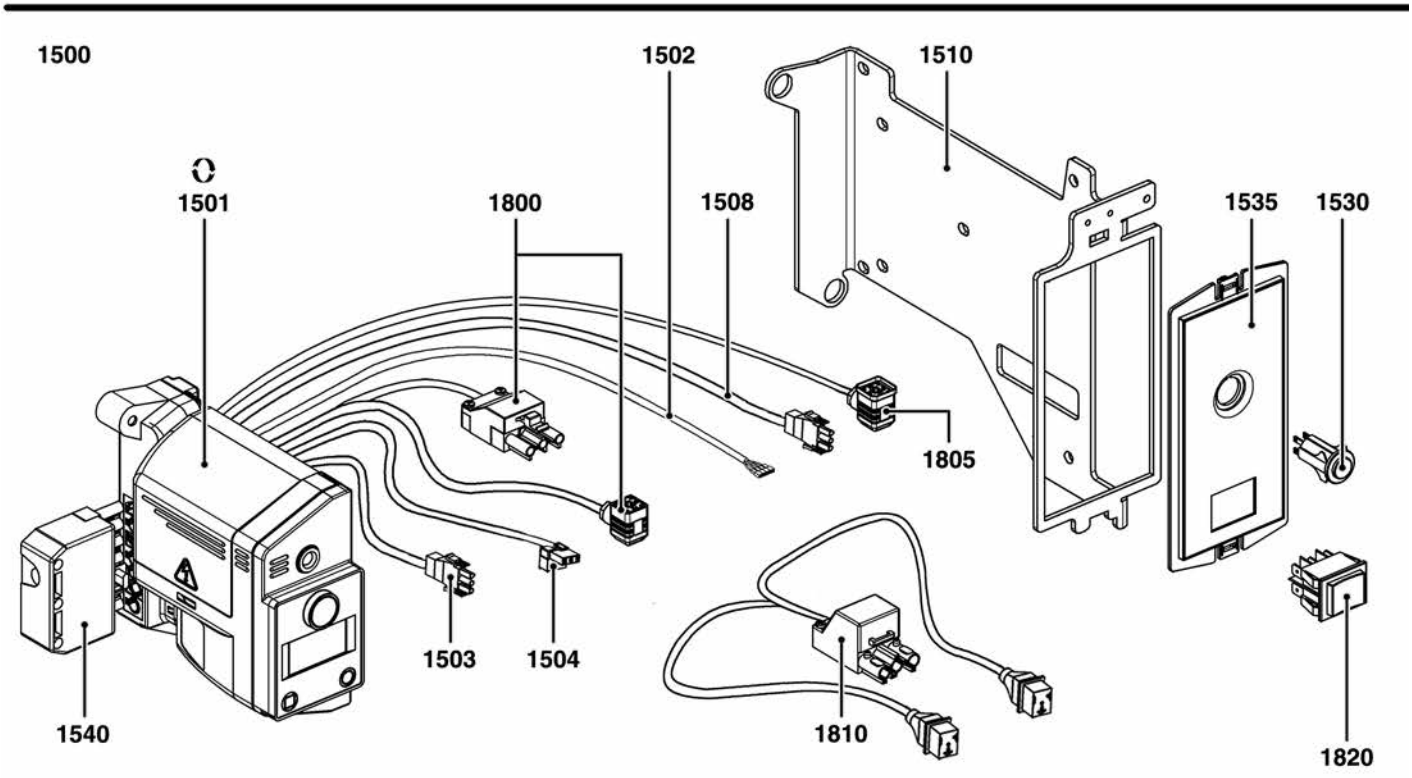
1500
1502
1510
1501
1800
1508
1535
1530
1805
1503
1504
1540
1810
1820

R8220128

	Description	Manf. Pt. N	Type	CB-NC12 B117A 03/4" Ro3/4" T2	CB-NC21 B117A 03/4" Ro3/4" T2	3	4	5	6	7	8	9	10	11	12	13	14	15	16	17	18	From	to
				1	2																	31	
1000	BURNER BODY																						
1010	INSULATION AIR INTAKE BOX	13017369		●	●																		
1020	AIR RECYCLING (BLACK)	13017364			●																		
	AIR RECYCLING (WHITE)	13017363		●																			
1030	IGNITION TRANSFO. EBI 2X7,5 230V	13009663		●	●																		
1050	AIR FLAP ASSEMBLY	13023775		●	●																		
1070	FAN WHEEL D146X52 d12,7	13010012		●																			
	FAN WHEEL D160X52 d12,7	13010095			●																		
1100	HOOD NC12...21A-FC12/16A + SCREW	65300769		●	●																		
1111	FLAT HEAD SCREW M5X15	65300519		●	●																		
1150	CAPACITOR 5µF ALU M8	65325038		●																			
	CAPACITOR 6,3µF ALU M8	13010016			●																		
1160	MOTOR 0,13KW230V D12,7	13010014			●																		
	MOTOR 0,16KW230V D12,7	13009981		●																			
1170	PUMP/MOTOR COUPLING	13018143		●	●																		
1175	OIL PUMP AS 47 D 1696	13010118	AS	●	●																		
	OIL PUMP BFP 21 L3 R2	65300856	BFP	●	●																		
1180	FILTERSET PUMP SUNTEC+DANFOSS	65300834		●	●																		
1185	COIL DAN 071N0010 230V	65323773	BFP	●	●																		
	COIL X PUMP AS47/AL35 220/240V	13010006	AS	●	●																		
1200	HOSE MW4 FC3/8 MG1/4 90	13007942		●	●																		
1250	AIR PRESSURE SWITCH BASE D32	13020723		●	●																		
1255	COMPENSATION TUBE	573576		●	●																		
1260	AIR PRESS.SWITCH 604.91 0,5-5MB+RAST	13020502		●	●																		
1500	ELECTRIC PART																						
1501	CONTROL UNIT TCG 141.02noTC	65300838		●	●																		
1502	FAULT RELEASE BUTTON CABLE	65300521		●	●																		
1503	CABLE+CONNECTOR/MOTOR	13010519		●	●																		
1504	CABLE+CONNECTOR/IGNITER	13010535		●	●																		
1508	CABLE+CONNECT./IRD DETECT.-LG400	65300210		●	●																		
1510	CONTROL UNIT BRACKET+DISPLAY	65300727		●	●																		
1530	RELEASE BUTTON	13015182		●	●																		
1535	INTERFACE/RELEASE KNOB	65300870		●	●																		
1540	WIELAND PLUG 7P.	13010523		●	●																		
1800	VALVE HARNESS (VGL2-NC12/21B)	65300868		●	●																		
1805	PRESS.SWITCH HARNESS (VGL2-NC12/21B)	65300869		●	●																		
1810	OIL VALVES HARNESS (VGL2-NC12/21B)	65300209		●	●																		
1820	OPERATING SWITCH 3 POS	13009683		●	●																		

2000

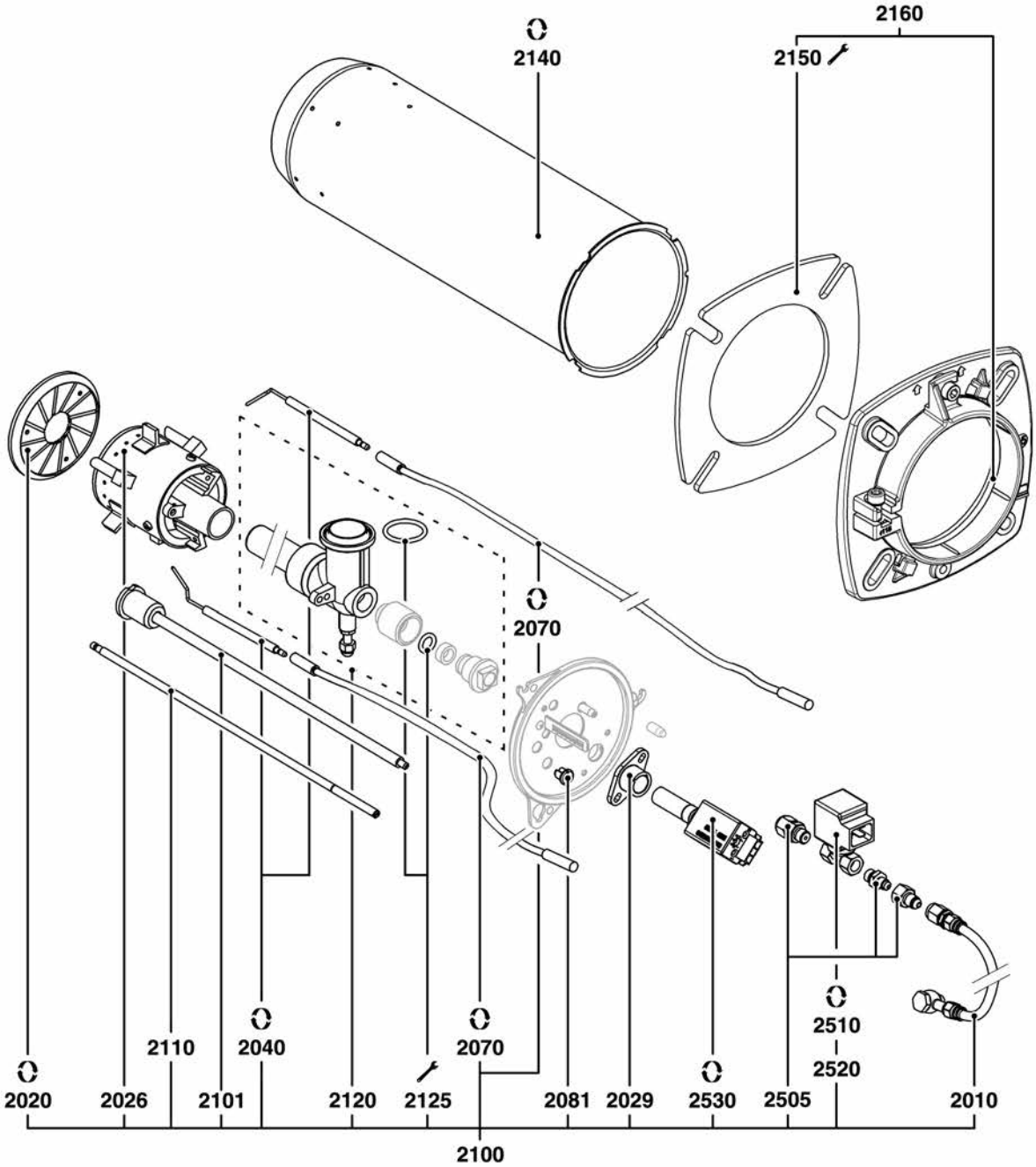

R8220127

	Description	Manf. Pt. N	Type	CB-NC12 B117/A 63/4" -R03/4" T2	CB-NC21 B117/A 63/4" -R03/4" T2	3	4	5	6	7	8	9	10	11	12	13	14	15	16	17	18	From	to
2000	COMBUSTION HEAD																						
2010	HOSE L300	13021221		●	●																		
2020	BAFFLE PLATE D. 86/20-12F.RIGHT	13015749		●																			
	BAFFLE PLATE D. 94/26-18F.RIGHT	13015753			●																		
2026	GAS DIFFUSER NC12 B117/8	65300211		●																			
	GAS DIFFUSER NC16 B117/8	65300212			●																		
2029	PHOTOCELL HOLD.M93 FOR IRD1020.1	13010461		●	●																		
2040	IGNITION ELECTRODES	13015858		●	●																		
2070	IGNITION CABLE L510	13014990		●	●																		
2081	GROMMET	13010058		●	●																		
2100	COMPLETE LINE (VGL2.120/NC12B-KL/T2)	65300866		●																			
	COMPLETE LINE (VGL2.210/NC21B-KL/T2)	65300867			●																		
2101	NOZZLE LINE NC12/16 B117/8 T2	65300213		●	●																		
2110	ADJUSTMENT SPINDLE NC12/16 B117/8 T2	65300214		●	●																		
2120	GAS ELBOW+TUBE NC12/16 B117/8 T2	65300215		●	●																		
2125	O-RING+GAS ELBOW SET	65300217		●	●																		
2140	FLAME TUBE D115/88/100 L350	65300205		●																			
	FLAME TUBE D115/97/100 L350	65300206			●																		
2150	GASKET/BOILER FRONT D115	13018135		●	●																		
2160	CONNECTION FLANGE D115	13018134		●	●																		
2505	GASKET+V.S.CONNEXTION SET NC12/16 B117/	65300216		●	●																		
2510	SOLEN. VALVE SUN SL1V2805 G1/8" 9W 230V	13018872		●	●																		
2520	COIL RAP M13 230V 8W	13018853		●	●																		
2530	PHOTOCELL IRD 1020 BLUE AXIAL	65300218		●	●																		

4000

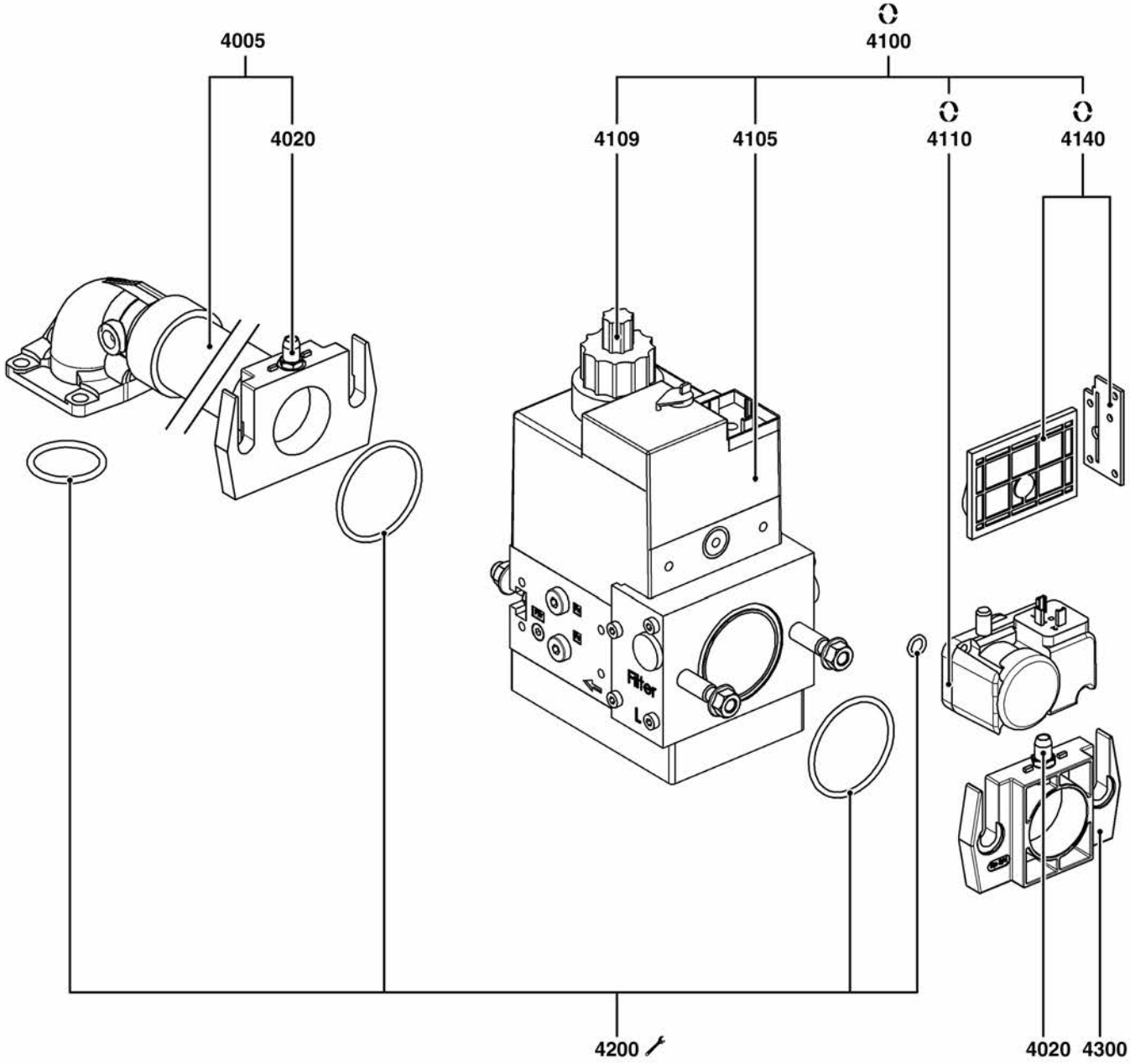

	Description	Manf. Pt. N	Type	CB-NC12 B117A 03/4" Rp3/4" T2	CB-NC21 B117A 03/4" Rp3/4" T2	3	4	5	6	7	8	9	10	11	12	13	14	15	16	17	18	From	to
				1	2																	31	
4000	GAS TRAIN																						
4005	COMPLETE COLLECTOR	13018098		●	●																		
4020	PRESSURE TAKE-OFF R1/8	13009722		●	●																		
4100	GAS VALVE MBDLE407 B01 S50 RP3/4"	65300222		●	●																		
4105	COIL DUN N° 1100 MBDLE405-407	13012423		●	●																		
4109	HYDRAULIC BRAKE	13010081		●	●																		
4110	GAS PRESS.SWITCH GW 150 A5 30-150MB DIN	13010078		●	●																		
4140	SCREEN FILTER /MB...405/407	13016011		●	●																		
4200	GASKET SET /MB...(ZR)DLE 407	13011111		●	●																		
4300	INLET FLANGE MB405/407	13010074		●	●																		

[redacted]

[redacted]

[redacted]

[redacted]

[redacted]

[redacted]

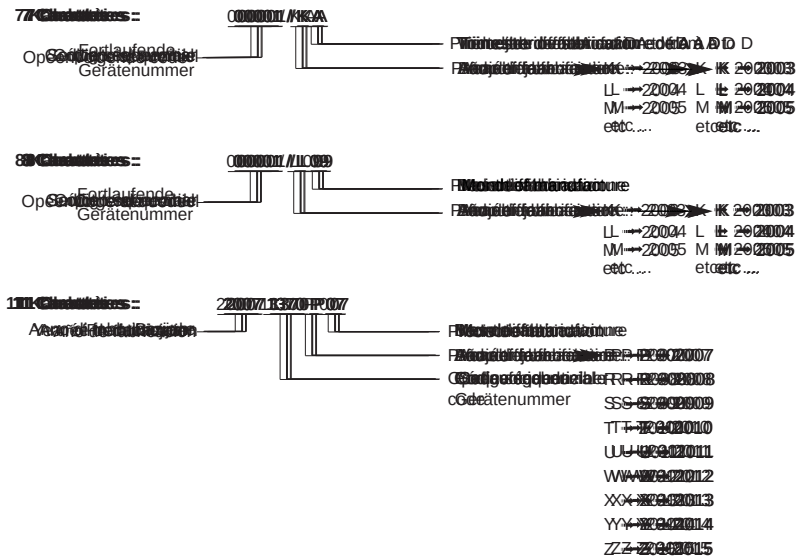

[redacted]