Chaffoteaux

SPARE PARTS EXPLODED VIEW
STORAGE GAS WATER HEATERS

Model

AG 04/2002 —> ...

R8202610-08 - 17/04/2018

EN	FR	IT	ES	DE	NL

Col	Reference	Model type	Begin	End
1	500060119031	ACCU GAZ 115 CF N	01-2003	02-2004
1	007844	C&M AG 115 CF	04-2002	-
2	500060159031	ACCU GAZ 155 CF N	01-2003	02-2004
2	007845	C&M AG 155 CF	04-2002	-
3	500060209031	ACCU GAZ 195 CF N	01-2003	02-2004
3	007846	C&M AG 195 CF	04-2002	-

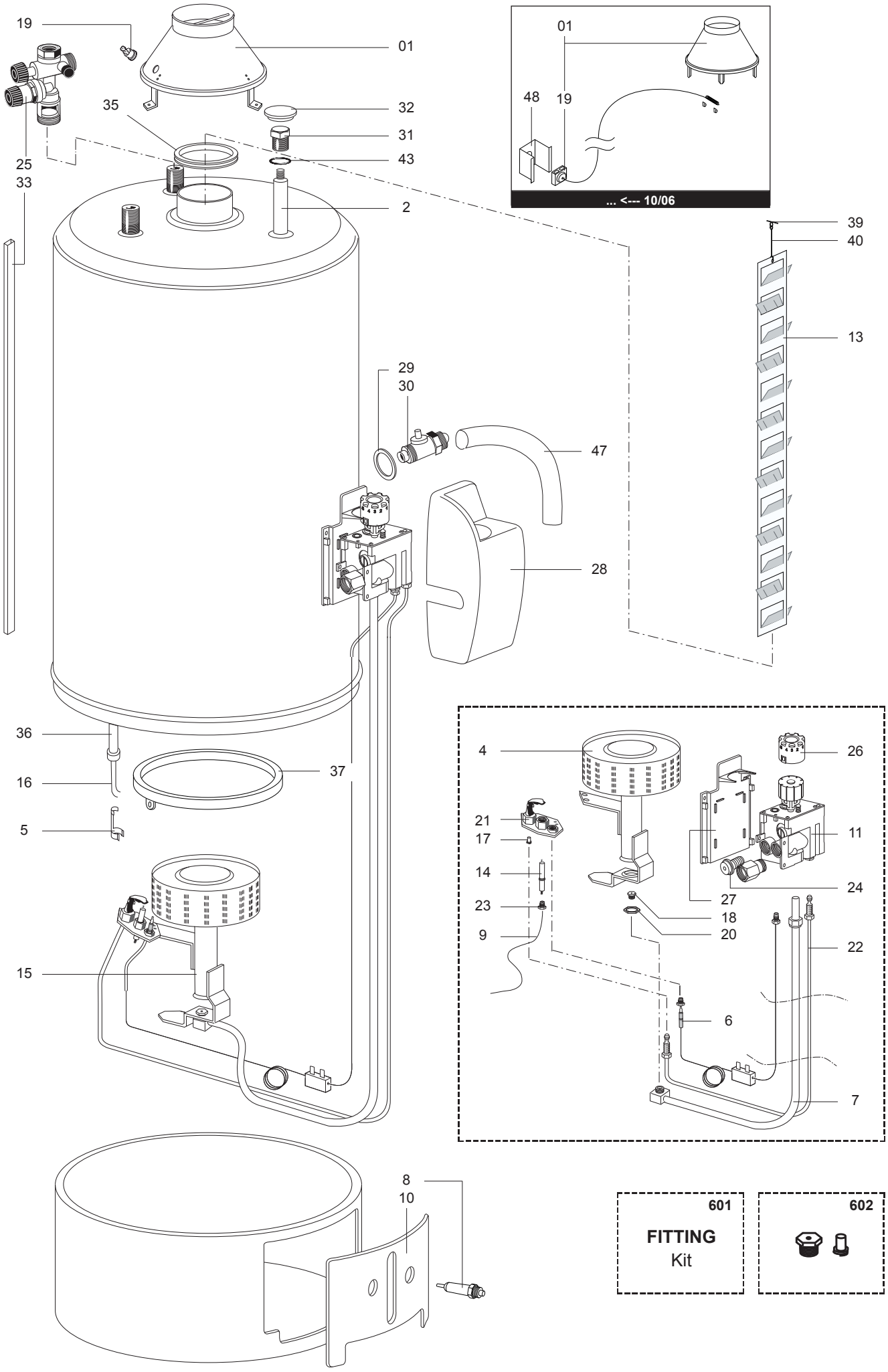
19
01
35
32
31
43
25
33
2
01
48
19
... <--- 10/06
39
40
13
29
30
47
28
36
37
16
5
4
26
21
17
11
14
24
23
27
18
9
20
22
15
6
7
8
10
601
FITTING
Kit
602

R8207156

	Description	Manf. Pt. N	Type	AG 115 L	AG 150 L	AG 195 L	4	5	6	7	8	9	10	11	12	13	14	15	16	17	18	From	to
0001	FLUE HOOD (COMPLETE)	65101030		●	●																		10/06
	FLUE HOOD (COMPLETE)	65101032				●																	10/06
	FLUE HOOD (COMPLETE)	65104712				●																11/06	
	FLUE HOOD (COMPLETE)	65104725		●	●																	11/06	
0002	ANODE D:21,3 L:800 M8	291086		●	●	●																	
0004	BURNER	290626		●	●	●																	
0005	SPRING (PROBE CLAMP)	290356		●	●	●																	
0006	THERMOCOUPLE (INTERRUPTED)	65103658		●	●	●																	
0007	PIPE (GAS VALVE/BURNER)	122452		●	●	●																	
0008	PUSH BUTTON (PIEZO)	200254		●	●	●																	
0009	CABLE (PIEZO IGNITION)	200259		●	●	●																	
0010	LID (BLUE)	290297		●	●	●																	
0011	GAS VALVE WITH CAPACITY REGULATOR	107825		●	●	●																	
0013	FLUE BAFFLE	289280			●																		
	FLUE BAFFLE	289295		●																			
	FLUE BAFFLE	289296				●																	
0014	IGNITION ELECTRODE	200253		●	●	●																	
0015	GAS GROUP	65103657		●																			
	GAS GROUP	65104514				●																	
0016	THERMOSTAT (SAFETY)	65103474		●	●	●																	
0017	BURNER JET (PILOT)	290727	B/P	●	●	●																	
	BURNER JET (PILOT)	290726	NAT	●	●	●																	
0018	BURNER JET	290595	B/P		●																		
	BURNER JET	290715	B/P	●																			
	BURNER JET	290954	B/P			●																	
	BURNER JET	289019	NAT	●																			
	BURNER JET	289020	NAT			●																	
	BURNER JET	290706	NAT		●																		
0019	BULB THERMOSTAT 85C (UNIPOLAR)	65103656		●	●	●																	10/06
	THERMOSTAT (OVERHEAT)	65104733		●	●	●																11/06	
0020	NUT	240151		●	●	●																	
0021	BURNER (PILOT)	290643		●	●	●																	
0022	PIPE (GAS VALVE/PILOT BURNER)	122453		●	●	●																	
0023	IGNITION ELECTRODE FIXING FITTING	230712		●	●	●																	
0024	FLOW REGULATOR	65101323		●	●	●																	
0025	SAFETY DEVICE 15/21 OR 20/27	60077063		●	●	●																	
	SAFETY VALVE	230213		●	●	●																	
0026	COVER (GAS VALVE KNOB)	220288		●	●	●																	
0027	SUPPORT PLATE (GAS VALVE)	220286		●	●	●																	
0028	GAS VALVE CASING (EUROSIT)	220287		●	●	●																	
0030	DRAIN COCK	230302		●	●	●																	
0031	PLUG	230536		●	●	●																	
0032	BOSS	220550		●	●	●																	
0033	ADHESIVE CHANNEL (THERMAL PROTECTOR)	65103128		●																			
	ADHESIVE CHANNEL (THERMAL PROTECTOR)	65103132			●																		
	ADHESIVE CHANNEL (THERMAL PROTECTOR)	65103133				●																	
0035	FLUE HOOD RING (D.100/95)	289353				●																	
0036	SHEATH	990475		●	●	●																	
0037	WATER TRAY	290919		●	●	●																	
0039	SPRING (FLUE BAFFLE SUPPORT)	290450		●	●	●																	
0043	O-RING	289442		●	●	●																	
0047	PIPE (CYLINDER DISCHARGE)	65102376		●	●	●																	
0048	FUME THERMOSTAT PROTECTION	220374		●	●	●																	10/06
0600	**ACCESSORY**																						
0601	PIPE FITTINGS KIT	990073		●	●	●																	
0602	CONVERSION KIT NAT > LPG	61309540		●																			
	CONVERSION KIT NAT > LPG	61309541			●																		
	CONVERSION KIT NAT > LPG	61309542				●																	

LIST OF THE ABBREVIATIONS

HW	: Hot water.
CW	: Cold water.
C	: Ceramic resistance (normal heating).
Ca	: Ceramic resistance (accelerated heating)
TP	: Immersion heater.
1F	: With fittings.
2F	: Without fittings.
3F	: With fittings and another outlet connection.
AMI	: With mixing valve.
SMI	: Without mixing valve.
PUISS	: Power of th appliance.
PN	: Appliance with normal pression.
LP	: Appliance with low pression.
PV	: Appliance with variable power.
PF	: Appliance with fixed power.

IDENTIFICATION PLATE

SERIAL NUMBER

6 Characters : 03 09 08
- Year of manufacture
- Manufacturing day
- Month of manufacture

9 Characters : M 12 10 0606
- Year of manufacture
- Month of manufacture
- Sequencial number

14 Characters : SI-V-0B0 45 07 0001
- Sequencial number
- Year of manufacture : 6 ➞ 2004, 7 ➞ 2005, 8 ➞ 2006 etc ...
- Month of manufacture : 25 ➞ January, 13 ➞ February, 32 ➞ March, 35 ➞ April, 39 ➞ May, 45 ➞ June, 43 ➞ July, 29 ➞ August, 40 ➞ September, 38 ➞ October, 51 ➞ November, 12 ➞ December
- Product model

15 Characters : 02 11 00001 007843
- Year of manufacture
- Month of manufacture
- Code appareil
- Sequencial number

21 Characters : 3200050 XX 08115 0000001
- Product reference
- Sequencial number
- Year (08) / Manufacturing day (115)

22 Characters : 3200050 XX 070115 0000001
- Product reference
- Sequencial number
- Year (07) / Month (01) / Manufacturing day (15)

The indications mentionned on the prices, commercial or technical literature and the scheme are written for your guidance and are available at a given time. The CONSTRUCTOR retains the power to modify the presentation, the form, the size, the conception or the material of the products.