ARISTON

SPARE PARTS EXPLODED VIEW
HEAT PUMPS
Model
HPWH 150 & 200

R8203319-04 - 20/07/2017

EN	FR	IT	ES	DE	NL

HPWH 150 & 200

Heat pumps

Col	Reference	Model type	Begin	End
1	000003069402	HPWH 150 WH TANK NEUTRAL	07-2011	-
2	000003069401	HPWH 200 WH TANK NEUTRAL	07-2011	-
3	000003069509	HPWH FLEX 150 WH TANK NEUTRAL		
4	000003069508	HPWH FLEX 200 WH TANK NEUTRAL		

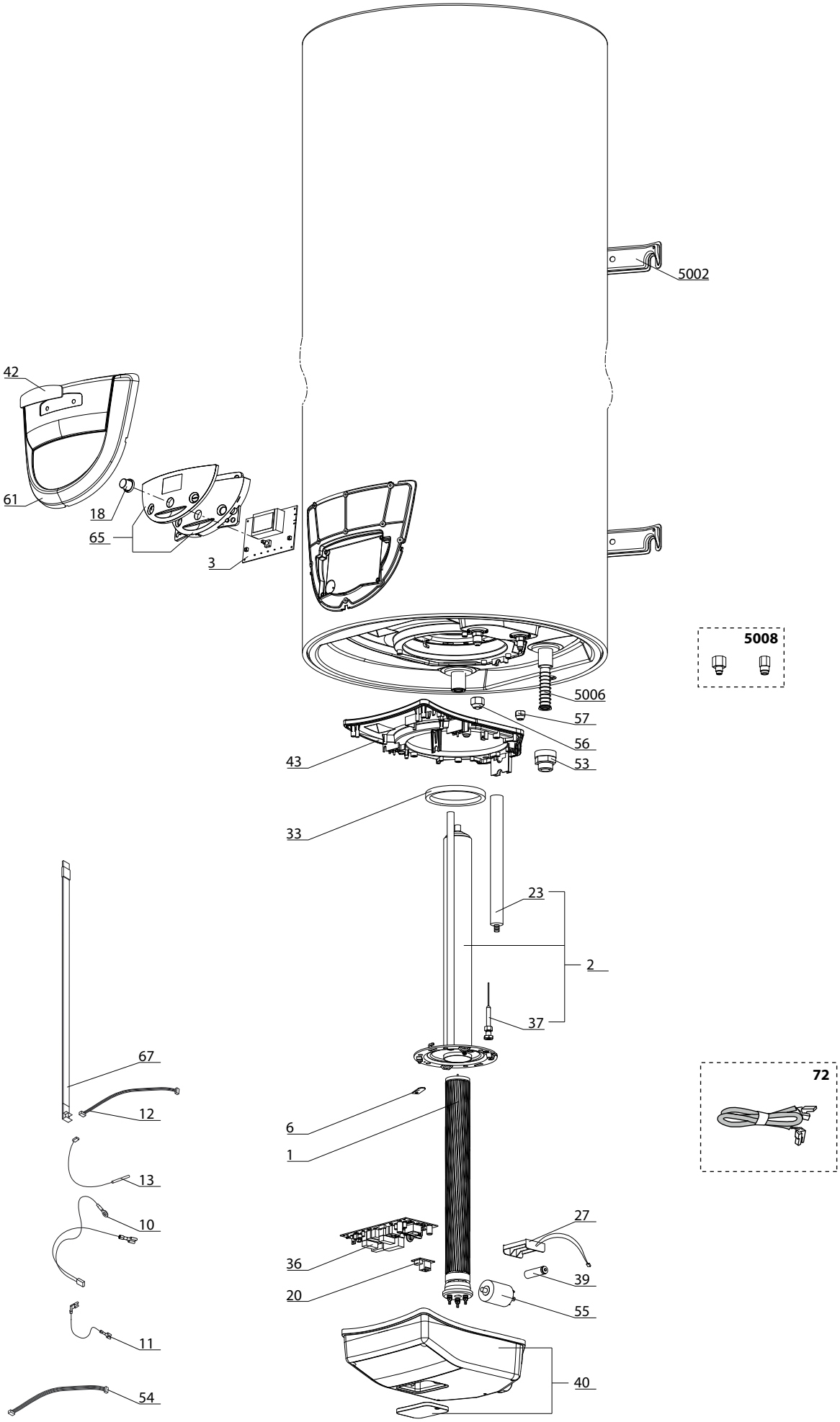
5002
42
61
18
65
3
5008
5006
57
56
43
53
33
23
2
37
67
72
12
6
1
13
10
27
36
39
20
55
11
40
54

R8208924

	Description	Manf. Pt. N	Type	150 L	200 L	150 L FLEX	200 L FLEX	1	2	3	4	5	6	7	8	9	10	11	12	13	14	15	16	17	18	From	to
0001	CERAMIC RESISTANCE 1000-1500-2500W D.50	60001714		●	●	●	●																				
0002	FLANGE WITH ANODE	60002852				●	●																				
	FLANGE WITH ANODES	60001788		●	●																						
0003	P.C.B. (DISPLAY)	60001830-02		●	●	●	●																				
0006	FIXING BRACKET	60072531		●	●	●	●																				
0010	CABLE (ELECTRODE)	60001720		●	●	●	●																				
0011	EARTH WIRE	60001717		●	●	●	●																				
0012	CABLE THERMISTOR TEMPERATURE SENSOR	60000772		●	●	●	●																				
0013	OUTSIDE HEAT SENSOR	60001715		●	●	●	●																				
0018	KNOB	60001708		●	●	●	●																				
0020	PRINTED CIRCUIT BOARD COMMUNICATION	60001710		●	●	●	●																				
0023	ANODE D:25,5 L:180 M5-M8	977127-01		●	●	●	●																				
0027	BATTERY HOLDER	60000478		●	●	●	●																				
0033	FLANGE GASKET Ø 121.7-105-11.5	60000682		●	●	●	●																				
0036	PRINTED CIRCUIT BOARD POWER	60002830-01		●	●	●	●																				
0037	ANODE (PROTECH)	65109749		●	●																						
	ANODE (PROTECH)	65111197				●	●																				
0039	BATTERY AA	60000443		●	●	●	●																				
0040	BOX COVER	60001713		●	●	●	●																				
0042	PLATE ARISTON	60001707		●	●	●	●																				
	PLATE CHAFFOTEAUX	60001807		●	●	●	●																				
0043	BASE - BOX	60001712		●	●	●	●																				
0053	DIELECTRIC JOINT 3/4»	926195		●	●	●	●																				
0054	WIRING P.C.B. > P.C.B.	60001816		●	●	●	●																				
0055	ANTIJAMMING FILTER	65110089		●	●	●	●																				
0056	PLUG BRASS G 5/8»	60001805		●	●	●	●																				
0057	PLUG BRASS G 7/16»	60001806		●	●	●	●																				
0061	BOX COVER	60001709		●	●	●	●																				
0065	TRIM	65110064		●	●	●	●																				
0067	THERMISTOR TEMP. SENSOR	60000446		●	●	●	●																				
0072	HEAT P.C.B. > EXTERNAL COMPLETE	60001721		●	●	●	●																				
	INTERFERENCE SUPPRESSION FILTER	60001716		●	●	●	●																				
	RESISTOR CABLE > P.C.B.	60001719		●	●	●	●																				
	WIRING POWER	60001718		●	●	●	●																				
5000	ACCESSORIES																										
5002	WALL FIXING BRACKET D:470-505-560-570	912006		●	●	●	●																				
5006	INSERT 3/4	60001255		●	●	●	●																				
5008	FITTINGS FOR GAS CONNECTIONS	65116482		●	●	●	●																				

LIST OF THE ABBREVIATIONS

HW	:	Hot water.
CW	:	Cold water.
C	:	Ceramic resistance (normal heating).
Ca	:	Ceramic resistance (accelerated heating)
TP	:	Immersion heater.
1F	:	With fittings.
2F	:	Without fittings.
3F	:	With fittings and another outlet connection.
AMI	:	With mixing valve.
SMI	:	Without mixing valve.
PUISS	:	Power of th appliance.
PN	:	Appliance with normal pression.
LP	:	Appliance with low pression.
PV	:	Appliance with variable power.
PF	:	Appliance with fixed power.

IDENTIFICATION PLATE

SERIAL NUMBER

9 Characters : 07 91 00301 **(from 01/77 to 12/92)**
- Month of manufacture
- Year of manufacture
- Sequencial number

10 Characters : 95 01 065004 **(from 01/93 to 06/95)**
- Year of manufacture
- Sequencial number
- Month of manufacture

OU

10 Characters : 01 95 065004 **(from 07/95)**
- Month of manufacture
- Sequencial number
- Year of manufacture

12 Characters : 924 2 3 134 0115
- Product reference
- Year of manufacture
- Sequencial number
- Manufacturing day

15 ou 16 Characters : (0)03 070 0001 893077 **(from 01/97 to 01/05)**
- Year of manufacture
- Day of manufacture
- Product reference
- Sequencial number

OU

16 Characters : 05 070 0001 0000000 **(from 02/05)**
- Year of manufacture
- Day of manufacture
- Product reference
- Sequencial number

17 Characters : 07 070 00315 3070107
- Year of manufacture
- Product reference
- Sequencial number
- Manufacturing day (70)

21 Characters : 3000115 XX 08115 0000001
- Product reference
- Sequencial number
- Year (08) / Manufacturing day (115)

22 Characters : 3000115 XX 070416 0000001
- Product reference
- Sequencial number
- Year (07) / Month (04) / Manufacturing day (16)

The indications mentionned on the prices, commercial or technical literature and the scheme are written for your guidance and are available at a given time. The CONSTRUCTOR retains the power to modify the presentation, the form, the size, the conception or the material of the products.