SPARE PARTS EXPLODED VIEW
HEAT PUMPS
Model
HPWH 270 & 300

R8203331-07 - 20/07/2017

EN	FR	IT	ES	DE	NL

HPWH 270 & 300

Heat pumps

Col	Reference	Model type	Begin	End
1	000003069400	HPWH 300 FS TANK NEUTRAL	07-2011	-
2	000003069501	HPWH FLEX 270 FS TANK NEUTRAL		

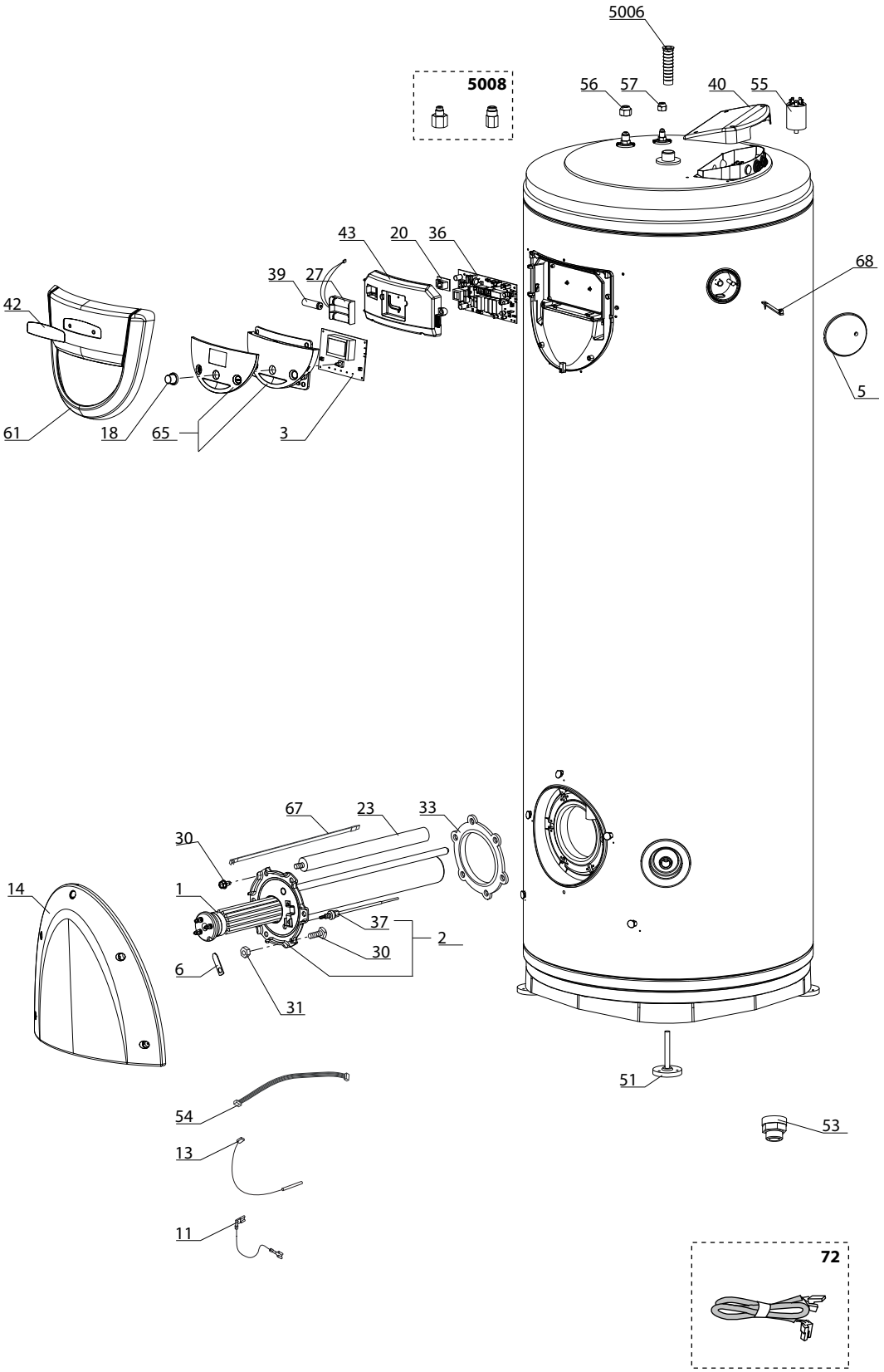
5006
5008
56
57
40
55
43
20
36
39
27
68
42
5
61
18
65
3
67
23
33
30
14
1
37
2
30
6
31
51
54
53
13
11
72

	Description	Manf. Pt. N	Type	HPWH 300	HPWH 270	3	4	5	6	7	8	9	10	11	12	13	14	15	16	17	18	From	to
0001	CERAMIC RESISTANCE 1000-1500-2500W D.50	60001714		●	●																		
0002	FLANGE WITH ANODE	60001789		●																			05/12
	FLANGE WITH ANODE	60001835		●																		06/12	
	FLANGE WITH ANODE	60002530			●																		
0003	P.C.B. (DISPLAY)	60001830-02		●	●																		
0005	PROBE COVER	60002538			●																		
0006	FIXING BRACKET	60072531		●	●																	06/12	
	LEG MAINTENANCE CERAMIC RESISTANCE	65408021		●																			05/12
0011	EARTH WIRE	60001717		●	●																		
0013	CABLE MB-PROBE TEMP	60002853			●																		
	HOT WATER PROBE	60001813		●																			
0014	COVER	60001810		●	●																		
0018	KNOB	60001708		●	●																		
0020	CONNECTIVE INDEX WITH SERIAL PORT	65108436		●	●																		
0023	ANODE D:25,5 L:180 M5-M8	977127-01		●																			
	ANODE D:25,7 L:380 M8	65102462			●																		
0027	BATTERY HOLDER	60000478		●	●																		
0030	SCREW M10X32	918061		●																			05/12
	SCREW M8X14 (6 PCES)	60000681			●																		
	SCREW M8X14 (6 PCES)	60000681		●																		06/12	
0031	NUT M10	64912308		●																			05/12
0033	FLANGE GASKET WITH 6 HOLES	924002		●																			05/12
	FLANGE GASKET Ø 121.7-105-11.5	60000682			●																		
	FLANGE GASKET Ø 121.7-105-11.5	60000682		●																		06/12	
0036	PRINTED CIRCUIT BOARD POWER	60002830-01		●	●																		
0037	ANODE (PROTECH)	65109749		●																			
	ANODE (PROTECH)	65111197			●																		
0039	BATTERY AA	60000443		●	●																		
0040	BOX COVER	60001812		●	●																		
0042	PLATE ARISTON	60001707		●	●																		
	PLATE CHAFFOTEAUX	60001807		●	●																		
0043	BASE - BOX	60001809		●	●																		
0051	ADJUSTABLE FOOT	65111175		●	●																		
0053	DIELECTRIC JOINT 3/4»	926195		●	●																		
0054	WIRING (CONTROL BOARD)	65109619		●	●																		
0055	ANTIJAMMING FILTER	65110089		●	●																		
0056	PLUG BRASS G 5/8»	60001805		●	●																		
0057	PLUG BRASS G 7/16»	60001806		●	●																		
0061	BOX COVER	60001811		●	●																		
0065	TRIM	65110064		●	●																		
0067	SENSOR	65102543		●	●																		
0068	PROBE	60002537			●																		
0072	HEAT P.C.B. > EXTERNAL COMPLETE	60001815		●	●																		
	RESISTOR - SENSOR CABLE > P.C.B.	60001787		●	●																		
	WIRING POWER	60001814		●	●																		
5000	ACCESSORIES																						
5006	INSERT 3/4	60001255		●	●																		
5008	FITTINGS FOR GAS CONNECTIONS	65116482		●	●																		

LIST OF THE ABBREVIATIONS

HW	:	Hot water.
CW	:	Cold water.
C	:	Ceramic resistance (normal heating).
Ca	:	Ceramic resistance (accelerated heating)
TP	:	Immersion heater.
1F	:	With fittings.
2F	:	Without fittings.
3F	:	With fittings and another outlet connection.
AMI	:	With mixing valve.
SMI	:	Without mixing valve.
PUISS	:	Power of th appliance.
PN	:	Appliance with normal pression.
LP	:	Appliance with low pression.
PV	:	Appliance with variable power.
PF	:	Appliance with fixed power.

IDENTIFICATION PLATE

SERIAL NUMBER

9 Characters : 07 91 00301 **(from 01/77 to 12/92)**
- Month of manufacture
- Year of manufacture
- Sequencial number

10 Characters : 95 01 065004 **(from 01/93 to 06/95)**
- Year of manufacture
- Sequencial number
- Month of manufacture

OU

10 Characters : 01 95 065004 **(from 07/95)**
- Month of manufacture
- Sequencial number
- Year of manufacture

12 Characters : 924 2 3 134 0115
- Product reference
- Year of manufacture
- Sequencial number
- Manufacturing day

15 ou 16 Characters : (0)03 070 0001 893077 **(from 01/97 to 01/05)**
- Year of manufacture
- Day of manufacture
- Product reference
- Sequencial number

OU

16 Characters : 05 070 0001 0000000 **(from 02/05)**
- Year of manufacture
- Day of manufacture
- Product reference
- Sequencial number

17 Characters : 07 070 00315 3070107
- Year of manufacture
- Product reference
- Sequencial number
- Manufacturing day (70)

21 Characters : 3000115 XX 08115 0000001
- Product reference
- Sequencial number
- Year (08) / Manufacturing day (115)

22 Characters : 3000115 XX 070416 0000001
- Product reference
- Sequencial number
- Year (07) / Month (04) / Manufacturing day (16)

The indications mentionned on the prices, commercial or technical literature and the scheme are written for your guidance and are available at a given time. The CONSTRUCTOR retains the power to modify the presentation, the form, the size, the conception or the material of the products.