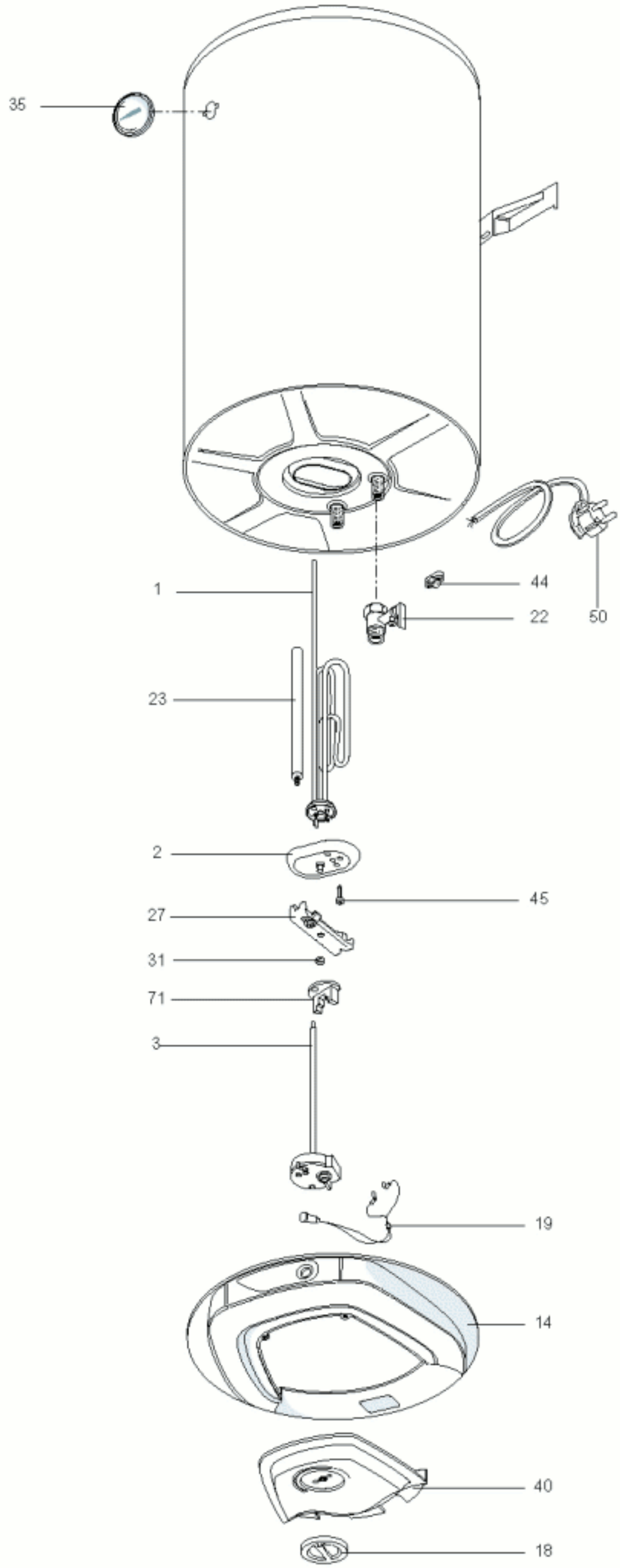

R8220611