ARISTON

SPARE PARTS EXPLODED VIEW
STORAGE GAS WATER HEATERS

Model

SGA BF X

R8218303-01 - 14/05/2019

EN	FR	IT	ES	DE	NL

SGA BF X

Storage Gas Water Heaters

Col	Reference	Model type	Begin	End
1	3211019	SGA BF X 120	02-2019	-
1	3211034	SGA BF X 120 EE	02-2019	-
2	3211020	SGA BF X 160	02-2019	-
2	3211035	SGA BF X 160 EE	02-2019	-

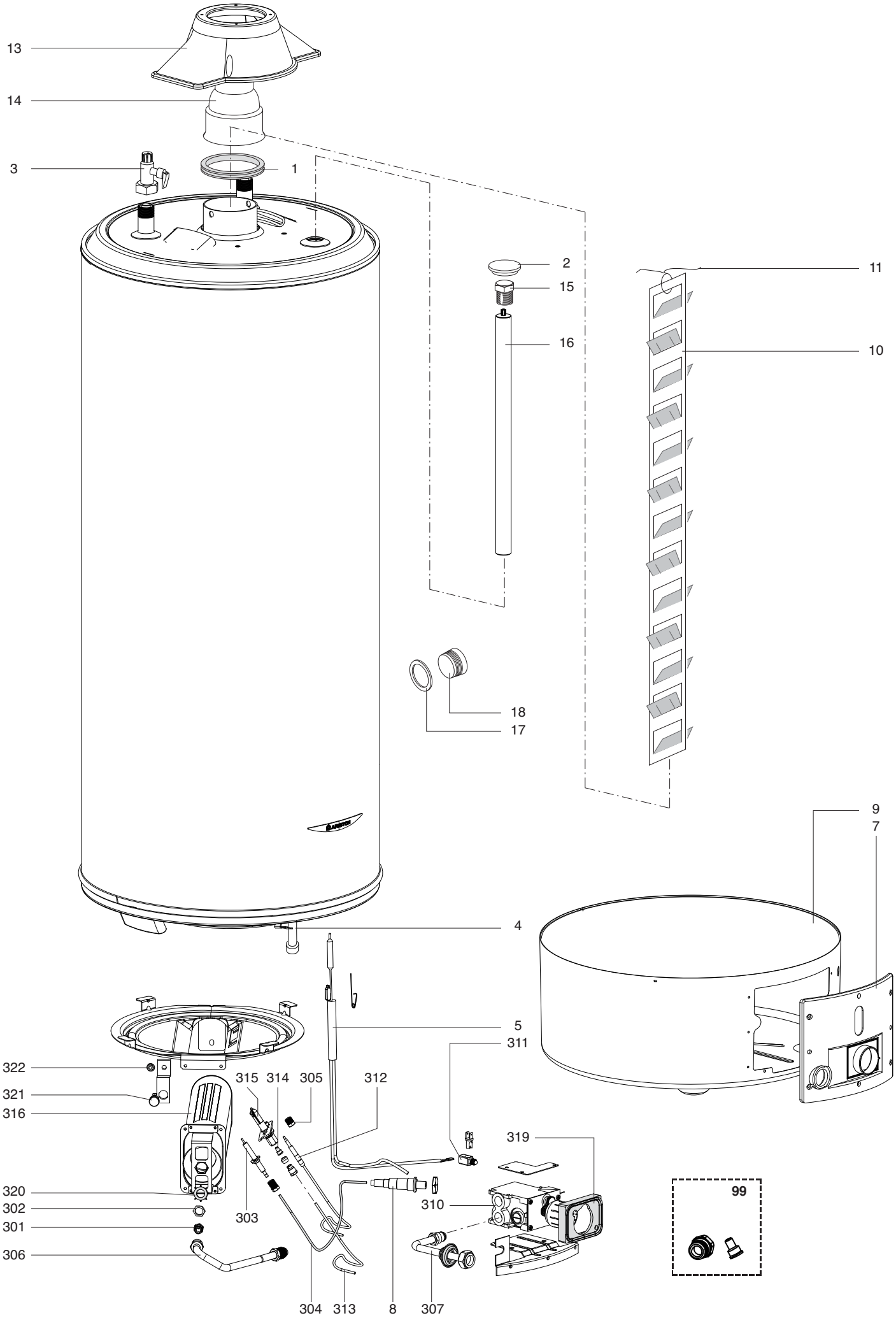
13
14
3
1
2
15
16
11
10
18
17
9
7
4
5
311
322
321
316
315
314
305
312
319
320
302
301
306
303
310
99
304
313
8
307

R8226079

	Description	Manf. Pt. N	Type	SGA BF X 120	SGA BF X 160	3	4	5	6	7	8	9	10	11	12	13	14	15	16	17	18	From	to
0001	FLUE PIPE GASKET	290135		●	●																		
0002	BOSS	220550		●	●																		
0003	SAFETY VALVE (3/4" 6,5 BAR)	60001310		●	●																		
0004	SHEATH	65117318			●																		
	SHEATH	990475		●																			
0005	THERMOSTAT (SAFETY)	65118368-01		●	●																		
0007	COMPLETE MOLDING DOOR	220718		●	●																		
0008	PUSH BUTTON (PIEZO)	200254		●	●																		
0009	BASE + GASKET	65119435		●	●																		
0010	FLUE BAFFLE	289413			●																		
	FLUE BAFFLE	65117845		●																			
0011	SPRING (FLUE BAFFLE SUPPORT)	290450		●	●																		
0013	FLUE HOOD (COMPLETE)	290926		●	●																		
0014	REDUCER (VENT STACK)	289335		●	●																		
0015	PLUG	230536		●	●																		
0016	ANODE D.21,3 L:660 M8X13	65116834			●																		
	ANODE D:21,3 L:550 M5-M8	993207-01		●																			
0017	RUBBER GASKET	290128		●	●																		
0018	DISCHARGE PLUG	230519		●	●																		
0099	TRANSFORMATION KIT G27	65118535	G27	●	●																		
	TRANSFORMATION KIT LPG	65117891	G31	●	●																		
0301	MAIN BURNER JET M11 D.1,10 G31	65117838	G31/G27	●	●																		
	MAIN BURNER JET M11 Ø 2.05 G20	65117829	G20	●	●																		
0302	NUT M16X1 H=3	240151		●	●																		
0303	IGNITION ELECTRODE	65117834		●	●																		
0304	CABLE (PIEZO IGNITION)	200252		●	●																		
0305	THERMOCOUPLE FIXING FITTING	230712		●	●																		
0306	PIPE (GAS VALVE-MAIN BURNER)	65117896		●	●																		
0307	PIPE (GAS INLET)	65118532		●	●																		
0310	GAS VALVE	107828		●	●																		
0311	SAFETY BLOCK	243005		●	●																		
0312	THERMOCOUPLE	65117830		●	●																		
0313	PIPE (GAS VALVE/PILOT BURNER)	65117897		●	●																		
0314	BURNER JET	65117839	G31	●	●																		
	BURNER JET (PILOT)	289202	G20	●	●																		
	BURNER JET (PILOT)	65118023	G27	●	●																		
0315	BURNER (PILOT)	65117828	G20	●	●																		
0316	MAIN BURNER	65118531		●	●																		
0319	GAS VALVE GASKET	290132		●	●																		
0320	DIAPHRAGM (BURNER G 30 FS FB LNX D=38)	65119437		●	●																		
0321	THERMOSTAT (OVERHEAT- 102°C)	12059044		●	●																		
0322	U-NUT	65119427		●	●																		

LIST OF THE ABBREVIATIONS

HW	: Hot water.
CW	: Cold water.
C	: Ceramic resistance (normal heating).
Ca	: Ceramic resistance (accelerated heating)
TP	: Immersion heater.
1F	: With fittings.
2F	: Without fittings.
3F	: With fittings and another outlet connection.
AMI	: With mixing valve.
SMI	: Without mixing valve.
PUISS	: Power of th appliance.
PN	: Appliance with normal pression.
LP	: Appliance with low pression.
PV	: Appliance with variable power.
PF	: Appliance with fixed power.

IDENTIFICATION PLATE

SERIAL NUMBER

6 Characters : 03 09 08
- Year of manufacture
- Manufacturing day
- Month of manufacture

9 Characters : 5 9 12 0606
- Year of manufacture
- Month of manufacture
- Sequencial number

14 Characters : SI-V-0B0 45 07 0001
- Sequencial number
- Year of manufacture : 6 → 2004, 7 → 2005, 8 → 2006, etc ...
- Month of manufacture : 25 → January, 13 → February, 32 → March, 35 → April, 39 → May, 45 → June, 43 → July, 29 → August, 40 → September, 38 → October, 51 → November, 12 → December
- Product model

14 Characters : 111518 XX 000010
- Month of manufacture
- Day of manufacture
- Sequencial number
- Year of manufacture

15 Characters : 02 11 00001 007843
- Year of manufacture
- Month of manufacture
- Product reference
- Sequencial number

21 Characters : 3200050 XX 08115 0000001
- Product reference
- Sequencial number
- Year (08) / Manufacturing day (115)

22 Characters : 3200050 XX 070115 0000001
- Product reference
- Sequencial number
- Year (07) / Month (01) / Manufacturing day (15)

The indications mentionned on the prices, commercial or technical literature and the scheme are written for your guidance and are available at a given time. The CONSTRUCTOR retains the power to modify the presentation, the form, the size, the conception or the material of the products.