ARISTON

SPARE PARTS EXPLODED VIEW
STORAGE GAS WATER HEATERS

Model

S/SGA BF X

R8218272-02 - 01/07/2019

EN	FR	IT	ES	DE	NL

S-SGA BF X

Storage Gas Water Heaters

Col	Reference	Model type	Begin	End
1	3211009	S/SGA BF X 80	12-2018	-
1	3211029	S/SGA BF X 80 EE	12-2018	-
2	3211010	S/SGA BF X 100	12-2018	-
2	3211030	S/SGA BF X 100 EE	12-2018	-

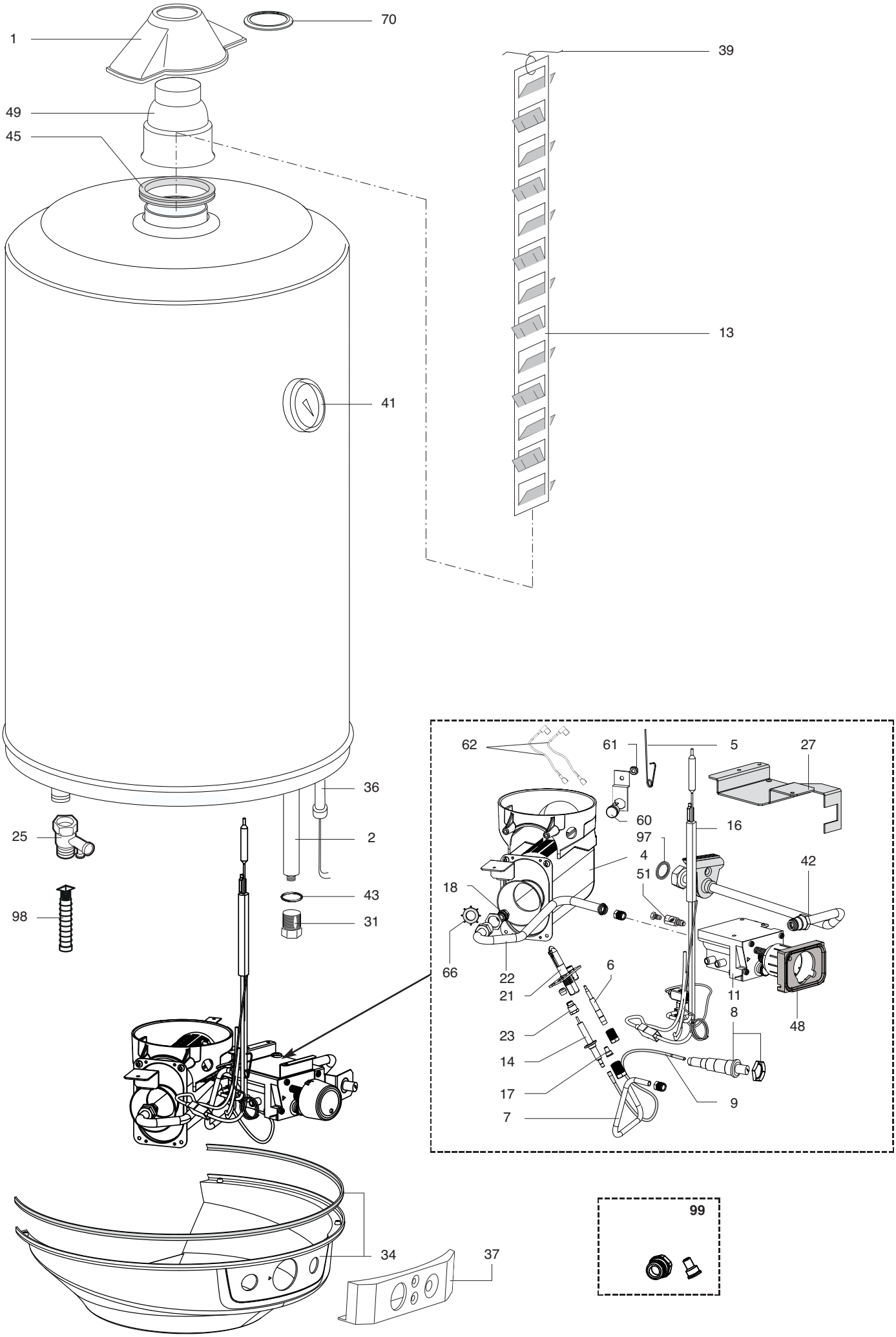
1
70
39
49
45
13
41
36
25
2
43
98
31
62
61
5
27
60
16
97
4
42
51
18
66
22
21
6
11
8
48
23
14
17
9
7
34
37
99

R8226037

	Description	Manf. Pt. N	Type	S/SGA BF X 80	S/SGA BF X 100	3	4	5	6	7	8	9	10	11	12	13	14	15	16	17	18	From	to
0001	FLUE HOOD (COMPLETE)	65119423		●	●																		
0002	ANODE D:21,3 L:380 M8	65117840		●																			
	ANODE D:21,3 L:390 M5-M8	993312-01			●																		
0004	BURNER (MAIN)	65117827		●	●																		
0005	SPRING (PROBE CLAMP)	290356		●	●																		
0006	THERMOCOUPLE	65117830		●	●																		
0007	PIPE (GAS VALVE/PILOT BURNER)	65117832		●	●																		
0008	PUSH BUTTON (PIEZO)	200254		●	●																		
0009	CABLE (PIEZO IGNITION)	200252		●	●																		
0011	GAS VALVE	107828		●	●																		
0013	FLUE BAFFLE	290492			●																		
	FLUE BAFFLE	65118374		●																			
0014	IGNITION ELECTRODE	65117834		●	●																		
0016	THERMOSTAT (SAFETY)	65118368-01		●	●																		
0017	BURNER JET	65117839	G31	●	●																		
	BURNER JET (PILOT)	289202	G20	●	●																		
	BURNER JET (PILOT)	65118023	G27	●	●																		
0018	BURNER JET	996641	G20	●	●																		
	MAIN BURNER JET M11 D=0.95 G31	65119432	G31	●	●																		
0021	BURNER (PILOT)	65117828		●	●																		
0022	PIPE (GAS VALVE/MAIN BURNER)	65117831		●	●																		
0023	THERMOCOUPLE FIXING FITTING	230712		●	●																		
0025	SAFETY VALVE (1/2" M - 3/4" F)	230224		●	●																		
0027	SUPPORT PLATE (GAS VALVE)	65118373		●	●																		
0031	ANODE PLUG FE G3/4-M5 H28 NE	65116257		●	●																		
0034	PLASTIC COVER	65118375		●	●																		
0036	SHEATH	65101259		●	●																		
0037	COVER PROTECTION	65118385		●	●																		
0039	SPRING (FLUE BAFFLE SUPPORT)	290450		●	●																		
0041	THERMOMETER	65117459		●	●																		
0042	PIPE (G3/8" GAS INLET)	65118369		●	●																		
0043	O-RING	289442		●	●																		
0045	FLUE PIPE GASKET	290135		●	●																		
0048	GASKET (GAS VALVE)	65118370		●	●																		
0049	REDUCER (VENT STACK)	289335		●	●																		
0051	SAFETY BLOCK	243005		●	●																		
0060	THERMAL PROTECTION 120°	65119601		●	●																		
0061	FLANGE NUT	65119427		●	●																		
0062	WIRING THERMOSTAT (SAFETY)	65119426		●	●																		
0066	DIAPHRAGM (BURNER G 30 GSWH LNX) D=36	65119434			●																		
	DIAPHRAGM (BURNER G 30 GSWH LNX) D=40	65119499		●																			
0070	RESTRICTOR D:60 d:46 Ep:8	60001072		●	●																		
0097	GASKET 18,5X11,5x2	290119		●	●																		
0098	BAFFLE (3/4" H=82)	65114044		●	●																		
0099	TRANSFORMATION KIT G27	65118496	G27	●	●																		
	TRANSFORMATION KIT LPG	65119433	G31	●	●																		

LIST OF THE ABBREVIATIONS

HW	: Hot water.
CW	: Cold water.
C	: Ceramic resistance (normal heating).
Ca	: Ceramic resistance (accelerated heating)
TP	: Immersion heater.
1F	: With fittings.
2F	: Without fittings.
3F	: With fittings and another outlet connection.
AMI	: With mixing valve.
SMI	: Without mixing valve.
PUISS	: Power of th appliance.
PN	: Appliance with normal pression.
LP	: Appliance with low pression.
PV	: Appliance with variable power.
PF	: Appliance with fixed power.

IDENTIFICATION PLATE

SERIAL NUMBER

6 Characters : 03 09 08
- Year of manufacture
- Manufacturing day
- Month of manufacture

9 Characters : 5 9 12 0606
- Year of manufacture
- Month of manufacture
- Sequencial number

14 Characters : SI-V-0B0 45 07 0001
- Sequencial number
- Year of manufacture : 6 → 2004, 7 → 2005, 8 → 2006, etc ...
- Month of manufacture : 25 → January, 13 → February, 32 → March, 35 → April, 39 → May, 45 → June, 43 → July, 29 → August, 40 → September, 38 → October, 51 → November, 12 → December
- Product model

14 Characters : 111518 XX 000010
- Month of manufacture
- Day of manufacture
- Sequencial number
- Year of manufacture

15 Characters : 02 11 00001 007843
- Year of manufacture
- Month of manufacture
- Product reference
- Sequencial number

21 Characters : 3200050 XX 08115 0000001
- Product reference
- Sequencial number
- Year (08) / Manufacturing day (115)

22 Characters : 3200050 XX 070115 0000001
- Product reference
- Sequencial number
- Year (07) / Month (01) / Manufacturing day (15)

The indications mentionned on the prices, commercial or technical literature and the scheme are written for your guidance and are available at a given time. The CONSTRUCTOR retains the power to modify the presentation, the form, the size, the conception or the material of the products.