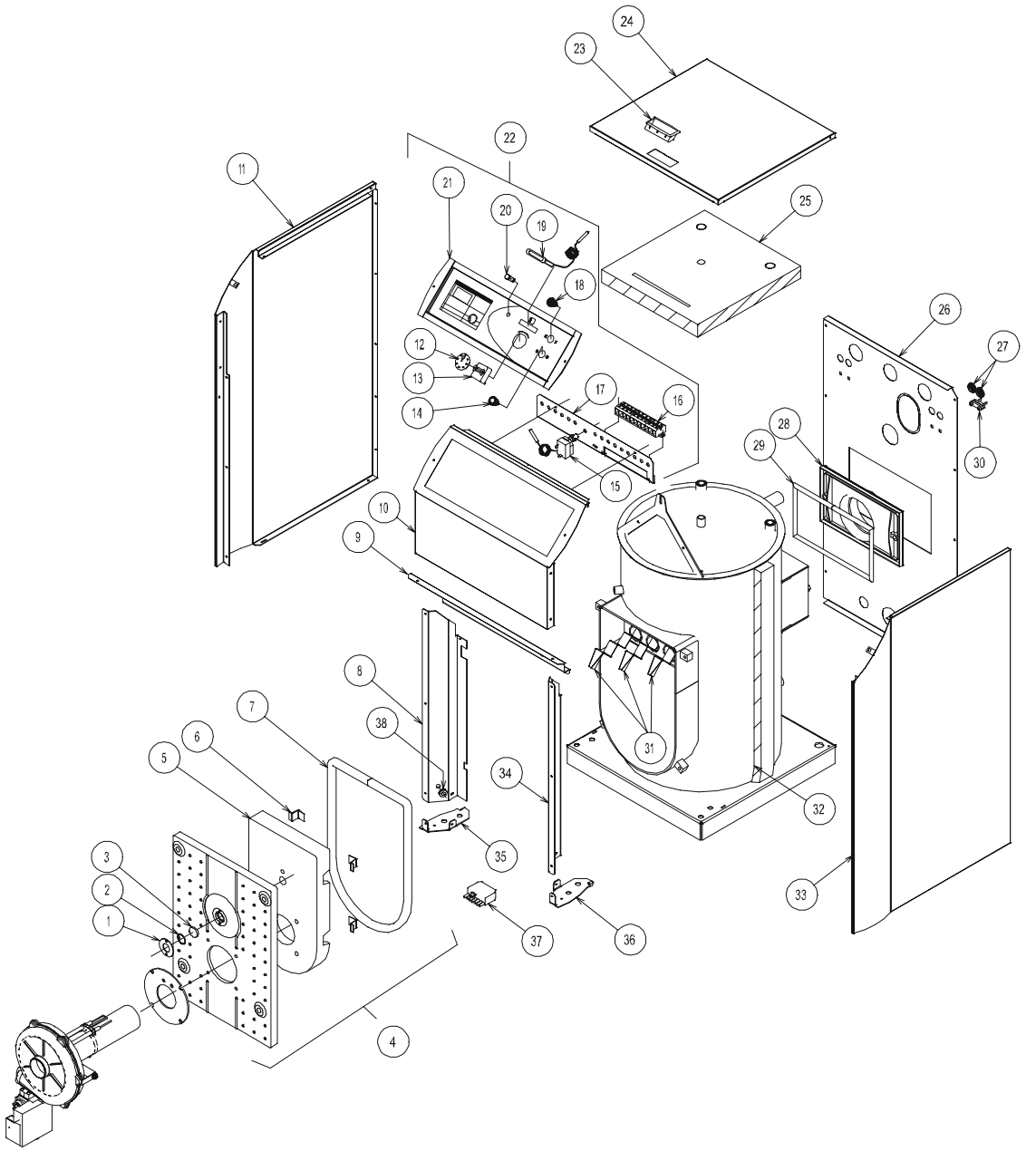

CTL GAZ 20-35 C