Ecoflam

SPARE PARTS EXPLODED VIEW
GAS BURNERS
Model
MAX GAS 40 E P TW

R8220315-01 - 22/05/2019

EN	FR	IT	ES	DE	NL

MAX GAS 40 E P TW

Gas burners

Col	Reference	Model type	Begin	End
1	3146233	MAX GAS 40 E P TC TW 230V 50-60 HZ	03-2019	-
2	3146234	MAX GAS 40 E P TL TW 230V 50-60 HZ	03-2019	-

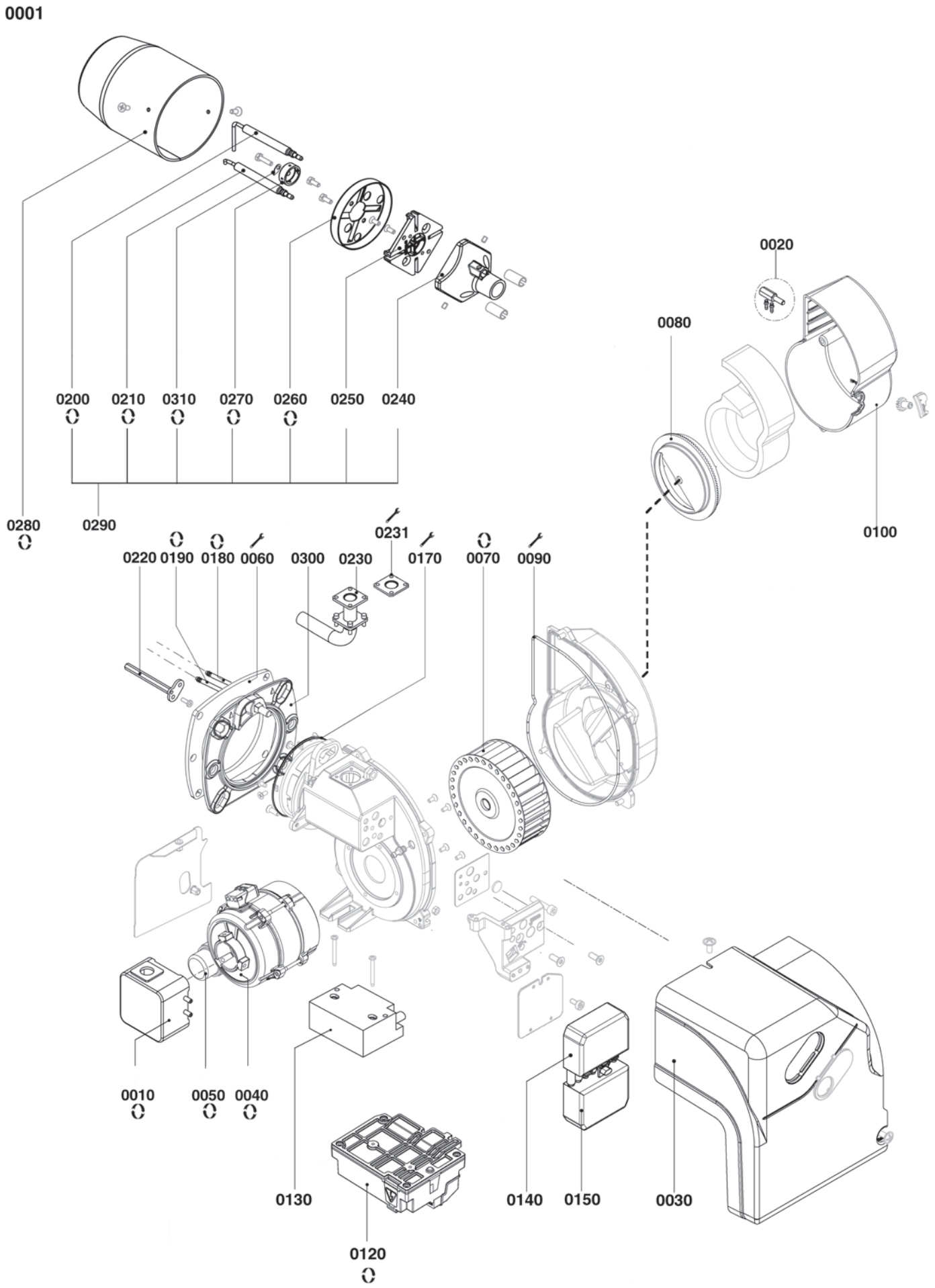
0001
0020
0080
0200
0210
0310
0270
0260
0250
0240
0280
0290
0231
0100
0220
0190
0180
0060
0300
0230
0170
0070
0090
0010
0050
0040
0130
0140
0150
0030
0120

	Description	Manf. Pt. N	Type	MAX GAS 40 E P TC TW	MAX GAS 40 E P TL TW	3	4	5	6	7	8	9	10	11	12	13	14	15	16	17	18	From	to
0001	BURNER BODY																						
0010	AIR PRESS.SWITCH LGW 10 A2P 1-10MB	65323047		●	●																		
0020	AIR INTAKE SET M6 (D3.0)	65108676		●	●																		
0030	COVER RED 172X224X135/MAXGAS 40	65325156		●	●																		
0040	MOTOR 0,075KW230V D12,7 F120/R Gas	65326743		●	●																		
0050	CAPACITOR 2µF 475V B P2 30X53	65326738	EBR	●	●																		
0060	GASKET/BURNER FLANGE 140X127X5 D97	65321110		●	●																		
0070	FAN WHEEL D120X42 D12,7	65323826		●	●																		
0080	AIR FLAP CASING SILENC. MAX1-MAXGAS40	65320523		●	●																		
0090	GASKET D2,5 L640 EPDM	65323876		●	●																		
0100	CASING SILENCER INLET AIR MAX	65320522		●	●																		
0120	ELECT.WIRING MAXGAS 40-250 TW	65324169		●	●																		
0130	IGNITION TRANSFO.28/35 PMD 1X7 230V L410	65323258		●	●																		
0140	SOCKET WIELAND 7P	65322070		●	●																		
0150	PLUG WIELAND 7P	65322069		●	●																		
0170	O-RING D83X3	65321066		●	●																		
0180	IONISATION CABLE CFR611/CLP3,9 L160	65325259	TC	●																			
	IONISATION CABLE CFR611/CLP3,9 L260	65325262	TL		●																		
0190	IGNITION CABLE D4/D4 L300 AP	65325252	TC	●																			
	IGNITION CABLE D4/D4 L400 AP	65325264	TL		●																		
0200	IONISATION PROBE D8X61 d4/6,4 D3X28 90°	65320905		●	●																		
0210	IGNITION ELECTRODE D8X61 d4 D1,65X6	65320904		●	●																		
0220	ADJUST ROD HEX.7 L121 M4/M4 INT.	65320166	TC	●																			
	ADJUST ROD HEX.7 L221 M4/M4 INT.	65320167	TL		●																		
0230	GAS ELBOW HEAD D16 L185 90° FLANGE 32X32	65321533	TL		●																		
	GAS ELBOW HEAD D16 L85 FLANGE 32X32	65321532	TC	●																			
0231	GASKET/GAS VALVE 33X33X2 D18	65321048		●	●																		
0240	GAS HEAD 58X58L50 D16 2 DRILL.D10,5	65321568		●	●																		
0250	CAP STAR GAS HEAD 58X58X9 4 SL. 3MM	65327583		●	●																		
0260	BAFFLE PLATE D75/22 4SL	65327584		●	●																		
0270	GAS NOZZLE D21,7/4,2X8 4 DRILL. D1,5	65325239	G30-31	●	●																		
	GAS NOZZLE D21,7/4,2X8 4 DRILL. D2	65325238	G20-25	●	●																		
0280	FLAME TUBE D89/76X187	65327586	TL		●																		
	FLAME TUBE D89/76X87	65327585	TC	●																			
0290	COMB.HEAD LPG L50 D74,6 CPL.	65324794	G30-31	●	●																		
	COMB.HEAD LPG MAX GAS 40-105 ERP CPL.	65327589	G20-25	●	●																		
0300	BURNER FLANGE D90 EXT.D133X146	65320973		●	●																		
0310	NEEDLE FOR IGNITION ARC MAX GAS 40/120	65325240		●	●																		

[redacted]ISS

[redacted]

[redacted]NZZATE

[redacted]

[redacted]

[redacted]

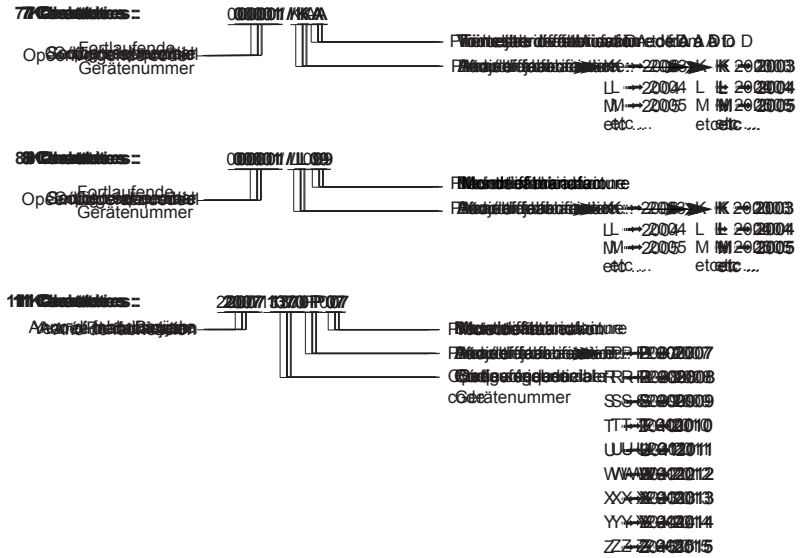

[redacted]