Ecoflam

MAX GAS 70-105-120 E P TW

Gas burners

SPARE PARTS EXPLODED VIEW
GAS BURNERS
Model
MAX GAS 70-105-120 E P TW

R8220316-01 - 28/06/2019

EN	FR	IT	ES	DE	NL

Col	Reference	Model type	Begin	End
1	3146237	MAX GAS 70 E P TC TW 230V 50-60 HZ	03-2019	-
2	3146238	MAX GAS 70 E P TL TW 230V 50-60 HZ	03-2019	-
3	3146241	MAX GAS 105 E P TC TW 230V 50-60 HZ	03-2019	-
4	3146242	MAX GAS 105 E P TL TW 230V 50-60 HZ	03-2019	-
5	3146245	MAX GAS 120 E P TC TW 230V 50-60 HZ	03-2019	-
6	3146246	MAX GAS 120 E P TL TW 230V 50-60 HZ	03-2019	-

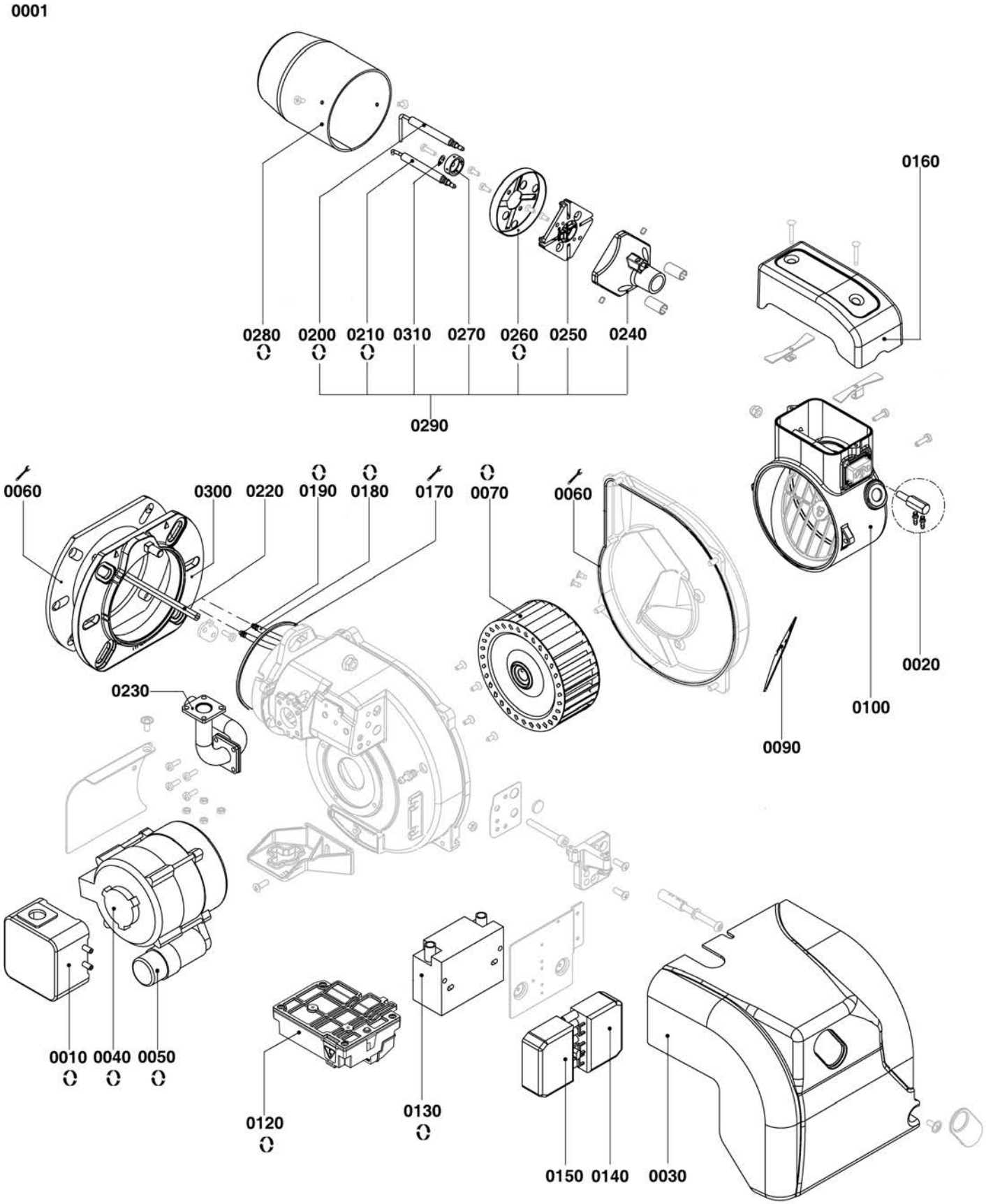
0001
0280
0200
0210
0310
0270
0260
0250
0240
0290
0160
0060
0300
0220
0190
0180
0170
0070
0060
0020
0100
0090
0230
0010
0040
0050
0120
0130
0150
0140
0030

	Description	Manf. Pt. N	Type	1 MAX GAS 70 E P TC TW	2 MAX GAS 70 E P TL TW	3 MAX GAS 105 E P TC TW	4 MAX GAS 105 E P TL TW	5 MAX GAS 120 E P TC TW	6 MAX GAS 120 E P TL TW	7	8	9	10	11	12	13	14	15	16	17	18	From	to
0001	**BURNER BODY**																						
0010	AIR PRESS.SWITCH LGW 10 A2P 1-10MB	65323047		●	●	●	●	●	●														
0020	AIR INTAKE SET M6 (D3.0)	65108676		●	●	●	●	●	●														
0030	COVER RED 190X193X182+TAP/MAXGAS 70-120	65325256		●	●	●	●	●	●														
0040	MOTOR 0,075KW230V D12,7 F120 Gas	65326742		●	●	●	●	●	●														
0050	CAPACITOR 2µF 475V B P2 30X53	65326738	EBR	●	●	●	●	●	●														
0060	GASKET/BURNER FLANGE 187X137X5 D105	65321109		●	●	●	●	●	●														
0070	FAN WHEEL CPR D120X60 D12,7	65327356						●	●														
	FAN WHEEL D120 X50 D12,7	65321770		●	●	●	●																
0090	BAFFLE PLATE AIR 83/58X70	65327590						●	●														
	GUIDE INLET AIR 82X62X61	65327631		●	●	●	●																
0100	AIR BOX 83X59X132+FLAP 84X57	65320130		●	●	●	●	●	●														
0120	ELECT.WIRING MAXGAS 40-250 TW	65324169		●	●	●	●	●	●														
0130	IGNITION TRANSFO.28/35 PMD 1X7 230V L410	65323258		●	●	●	●	●	●														
0140	SOCKET WIELAND 7P	65322070		●	●	●	●	●	●														
0150	PLUG WIELAND 7P	65322069		●	●	●	●	●	●														
0160	COVER 64X143X55/AIR BOX	65320518		●	●	●	●	●	●														
0170	O-RING D100X2	65321061		●	●	●	●	●	●														
0180	IONISATION CABLE CFR611/CLP3,9 L300	65325260	TC	●		●		●															
	IONISATION CABLE CFR611/CLP3,9 L380	65325261	TL		●		●		●														
0190	IGNITION CABLE D4/D4 L300 AP	65325252	TC	●																			
	IGNITION CABLE D4/D4 L350 AP	65325253	TC			●		●															
	IGNITION CABLE D4/D4 L400 AP	65325264	TL		●																		
	IGNITION CABLE D4/D4 L450 AP	65325263	TL				●		●														
0200	IONISATION PROBE D8X61 d4/6,4 D3X28 90°	65320905		●	●	●	●	●	●														
0210	IGNITION ELECTRODE D8X61 d4 D1,65X6	65320904		●	●	●	●	●	●														
0220	ADJUST ROD HEX.7 L121 M4/M4 INT.	65320166	TC	●																			
	ADJUST ROD HEX.7 L192 M4/M4 INT.	65320164	TC					●															
	ADJUST ROD HEX.7 L221 M4/M4 INT.	65320167	TL		●																		
	ADJUST ROD HEX.7 L272 M4/M4 INT.	65320165	TL						●														
	ADJUSTMENT SPINDLE L172	65327591	TC			●																	
	ADJUSTMENT SPINDLE L252	65327592	TL				●																
0230	GAS ELBOW HEAD D16 L140+CONN.D16X71 90°	65321530	TC					●															
	GAS ELBOW HEAD D16 L185+CONN.D16X71 90°	65321529	TL		●																		
	GAS ELBOW HEAD D16 L220+CONN.D16X71 90°	65321531	TL						●														
	GAS ELBOW HEAD D16 L85+CONN.D16X71 90°	65321528	TC	●																			
	GAS ELBOW HEAD HOLDER 32X32 D16 90° L120	65327629	TC			●																	
	GAS PIPE SUPP. HEAD-GT MAX GAS105 ERP TL	65327630	TL				●																
0240	GAS HEAD 58X58L50 D16 2 DRILL.D10,5	65321568		●	●	●	●	●	●														
0250	CAP STAR GAS HEAD 58X58X9 4 SL. 3MM	65327583		●	●	●	●																
	CAP STAR GAS HEAD 58X58X9 4 SL. 4MM	65327593						●	●														
0260	BAFFLE PLATE D75/22 4SL	65327584		●	●	●	●	●	●														
0270	GASNOZZLE D21,7/18/4,2 L8 4 DRIL.D1,5LPG	65325239	G30-31	●	●	●	●	●	●														
	GASNOZZLE D21,7/18/4,2 L8 4 DRILL.D2	65325238	G20-25	●	●	●	●	●	●														
0280	FLAME TUBE D89/100/81X180	65327596	TC					●															
	FLAME TUBE D89/100/81X260	65327597	TL						●														
	FLAME TUBE D89/76X105	65327587	TC	●																			
	FLAME TUBE D89/76X205	65327588	TL		●																		
	FLAME TUBE D89/98/75X160	65327594	TC			●																	
	FLAME TUBE D89/98/75X240	65327595	TL				●																
0290	COMB.HEAD LPG MAX GAS 40-105 ERP CPL.	65327589	G20-25	●	●	●	●																
	COMBUST.HEAD ASSEMBLY MAX GAS 120 ERP	65327598	G20-25					●	●														
0300	BURNER FLANGE D120 HOUS.D120	65320972		●	●	●	●	●	●														
0310	NEEDLE FOR IGNITION ARC MAX GAS 40/120	65325240		●	●	●	●	●	●														

[redacted]ISS

[redacted]

[redacted]IZZATE

[redacted]

[redacted]

[redacted]

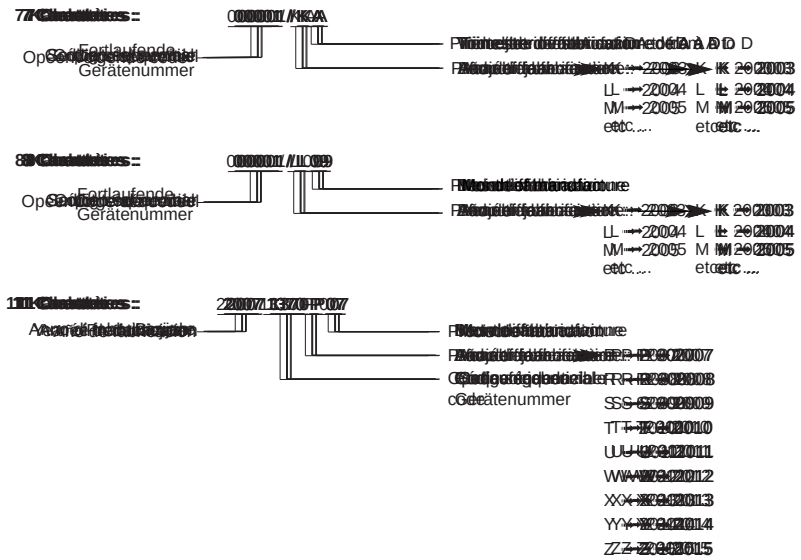
Fortlaufende
Gerätenummer
etc.
etc.
etc.