Ecoflam

SPARE PARTS EXPLODED VIEW
OIL BURNER
Model
MAX 8-12 AB HS (L+S)

R8220202-01 - 29/06/2017

EN	FR	IT	ES	DE	NL

Col	Reference	Model type	Begin	End
1	3124092	MAX 8 AB HS TC (L+S)230 V 50/60 HZ	02-2010	-
2	3124093	MAX 8 AB HS TL (L+S)230 V 50/60 HZ	01-2010	-
3	3124094	MAX 12 AB HS TC (L+S)230 V 50/60 HZ	10-2011	-
4	3124095	MAX 12 AB HS TL (L+S)230 V 50/60 HZ	10-2011	-

1000

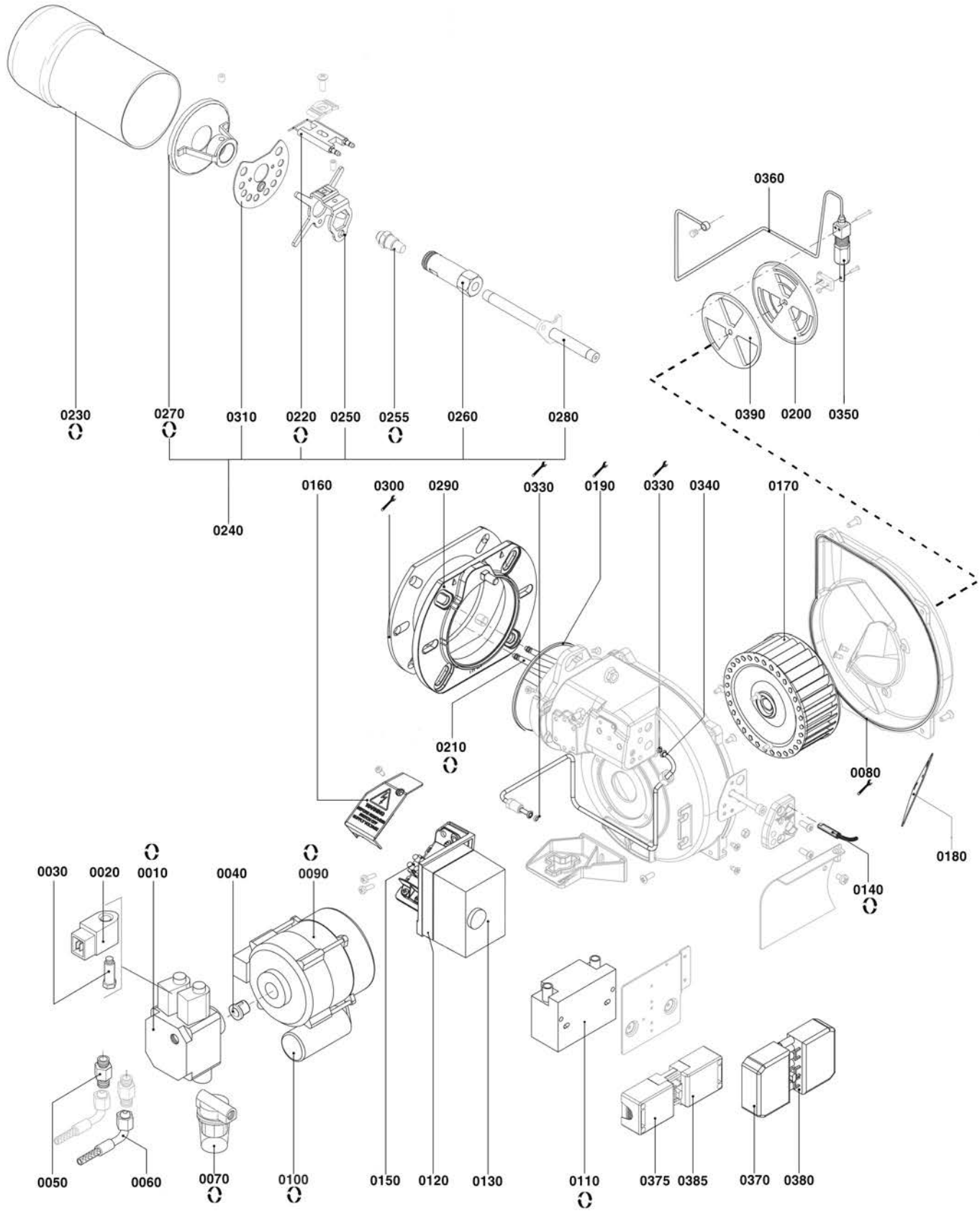

R8210023

	Description	Manf. Pt. N	Type	1 MAX 8 AB HS TC (L+S)230 V 50/60 HZ	2 MAX 8 AB HS TL (L+S)230 V 50/60 HZ	3 MAX 12 AB HS TC (L+S)230 V 50/60 HZ	4 MAX 12 AB HS TL (L+S)230 V 50/60 HZ	5	6	7	8	9	10	11	12	13	14	15	16	17	18	From	to
1000	BURNER BODY																						
0010	OIL PUMP AT3V 45 A	65325120		●	●	●	●																
0020	COIL SUN PUMP AS47-AL35 220V	65323767		●	●	●	●																
0030	CORE/SOLEN. VALVE P. SUN AS47-67-AT2	65323744		●	●	●	●																
0040	COUPLING D18/14,7/11X22 PUMP/MOTOR	65322920		●	●	●	●																
0050	UNION G1/4-1/4/OIL HOSE TN6X700	65321179		●	●	●	●																
0060	OIL HOSE TN 6X700 3/8 G/BIS 1/4" K	65323189		●	●	●	●																
0070	OIL FILTER 3/8 70451/006AGE VITON	65325046		●	●	●	●																
0080	GASKET D2,5 L640 EPDM	65323876		●	●	●	●																
0090	MOTOR 0,13KW230V D12,7 F0	65322873				●	●																
	MOTOR 0,1KW230V D12,7 F0	65322874		●	●																		
0100	CAPACITOR 3µF 2P 3mm	65325037	ACC			●	●																
	CAPACITOR 4µF 2P 3mm	13011117	ACC	●	●																		
	CAPACITOR 6,3µF 2P 3MM	13010016	SIMEL	●	●	●	●																
0110	IGNITION TRANSFO. TRK31 30CHD230V	65324966		●	●	●	●																
0120	PLUG-IN BASE/CONTROL UNIT LOA LGB-AGK11	65320092		●	●	●	●																
0130	CONTROL UNIT LOA 24.171 B2EM	65320028		●	●	●	●																
0140	PHOTOCELL QRB 1A A050B70A2 BLACK	65320076		●	●	●	●																
0150	TERMINAL STRIP 4P. HOUS. D180 1F	65322076		●	●	●	●																
0160	COVER TERMINAL	65320663		●	●	●	●																
0170	FAN WHEEL D120 X50 D12,7	65321770		●	●	●	●																
0180	AIR RECYCLING 66,9X61,5X1 2 OP. 7X3	65320621		●	●	●	●																
0190	O-RING D100X2	65321061		●	●	●	●																
0200	AIR FLAP	65324964		●	●	●	●																
0210	IGNITION CABLE D4/D4 L300	65320933		●		●																	
	IGNITION CABLE D4/D4 L350	65320934			●		●																
0220	ELECTRODE BLOCK 25X40 D4 D2X25 45°	65320924		●	●	●	●																
0230	FLAME TUBE D89/76 L111	65320298		●																			
	FLAME TUBE D89/80 L168	65320299			●																		
	FLAME TUBE D89/98/87 L135	65320362				●																	
	FLAME TUBE D89/98/87 L192	65320363					●																
0240	FIRING HEAD MAX 12 TC	65322558				●																	
	FIRING HEAD MAX 12 TL	65322559					●																
	FIRING HEAD MAX 8 TC	65322556		●																			
	FIRING HEAD MAX 8 TL	65322557			●																		
0250	CROSSPIECE OIL HOUS. D100-125 HOLDER	65320687		●	●	●	●																
0255	NOZZLE DAN 1,10GPH 60° S	13016084		●	●																		
	NOZZLE DAN 2,25GPH 60° S	13016089				●	●																
0260	NOZZLE CARRIER D18,3X60 HEX.19	65320707		●	●	●	●																
0270	BAFFLE PLATE D74/24X40 10SL	65320750		●	●																		
	BAFFLE PLATE D74/26X40 8SL	65320753				●	●																
0280	ROD NOZZ. LINE+PLATE D10/3 L160 G1/8	65320187				●																	
	ROD NOZZ. LINE+PLATE D10/3 L160-102 G1/8	65320183		●																			
	ROD NOZZ. LINE+PLATE D10/3 L217 G1/8	65320188					●																
	ROD NOZZ. LINE+PLATE D10/3 L217-159 G1/8	65320184			●																		
0290	BURNER FLANGE D120 HOUS.D120	65320972		●	●	●	●																
0300	GASKET/BURNER FLANGE 187X137X5 D105	65321109		●	●	●	●																
0310	SWIRLER D64/18,5 REAR 6DRIL.	65320726		●	●	●	●																
0330	GASKET/OIL TUBE-BUSH D8,5/3,5X1,5	65321065		●	●	●	●																
0340	TUBE D4X1 OIL PUMP/HEAD	65321500		●	●	●	●																
0350	OIL JACK HOUS. D. 180	65322331		●	●	●	●																
0360	TUBE D4X183 CURVED/HYDRAULIC JACK	65321510		●	●	●	●																
0370	WIELAND PLUG 7P	65322069		●	●	●	●																
0375	WIELAND PLUG 4P	65322065		●	●	●	●																
0380	WIELAND SOCKET 7P	65322070		●	●	●	●																
0385	WIELAND SOCKET 4P COVER GREEN	65322068		●	●	●	●																
0390	FLAP INTERNAL ADJUSTMENT AIR D113	65324965		●	●																		
	FLAP INTERNAL ADJUSTMENT AIR D125	65320538				●	●																

[redacted]ISS

[redacted]

[redacted]NIZZATE

[redacted]

[redacted]

[redacted]

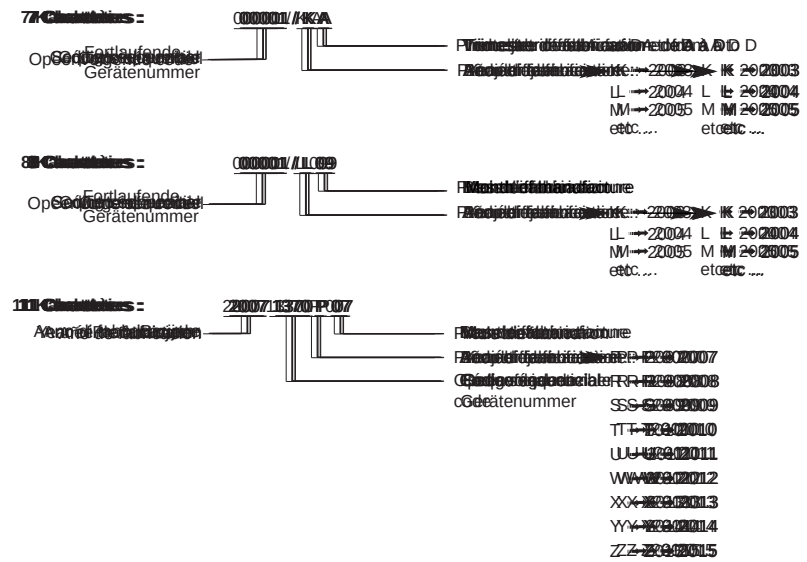

[redacted]