Ecoflam

SPARE PARTS EXPLODED VIEW
GAS-WALL BOILER ATM. BURNER

Model

LINDA+24 CS CPR

R8217653-01 - 24/10/2016

EN	FR	IT	ES	DE	NL

LINDA+24 CS CPR

Gas-wall boiler atm. burner

Col	Reference	Model type	Begin	End
1	535923	LINDA + 24 CS CPR N (FR)	02-2002	05-2004
2	535924	LINDA + 24 CS CPR B (FR)	02-2002	07-2004

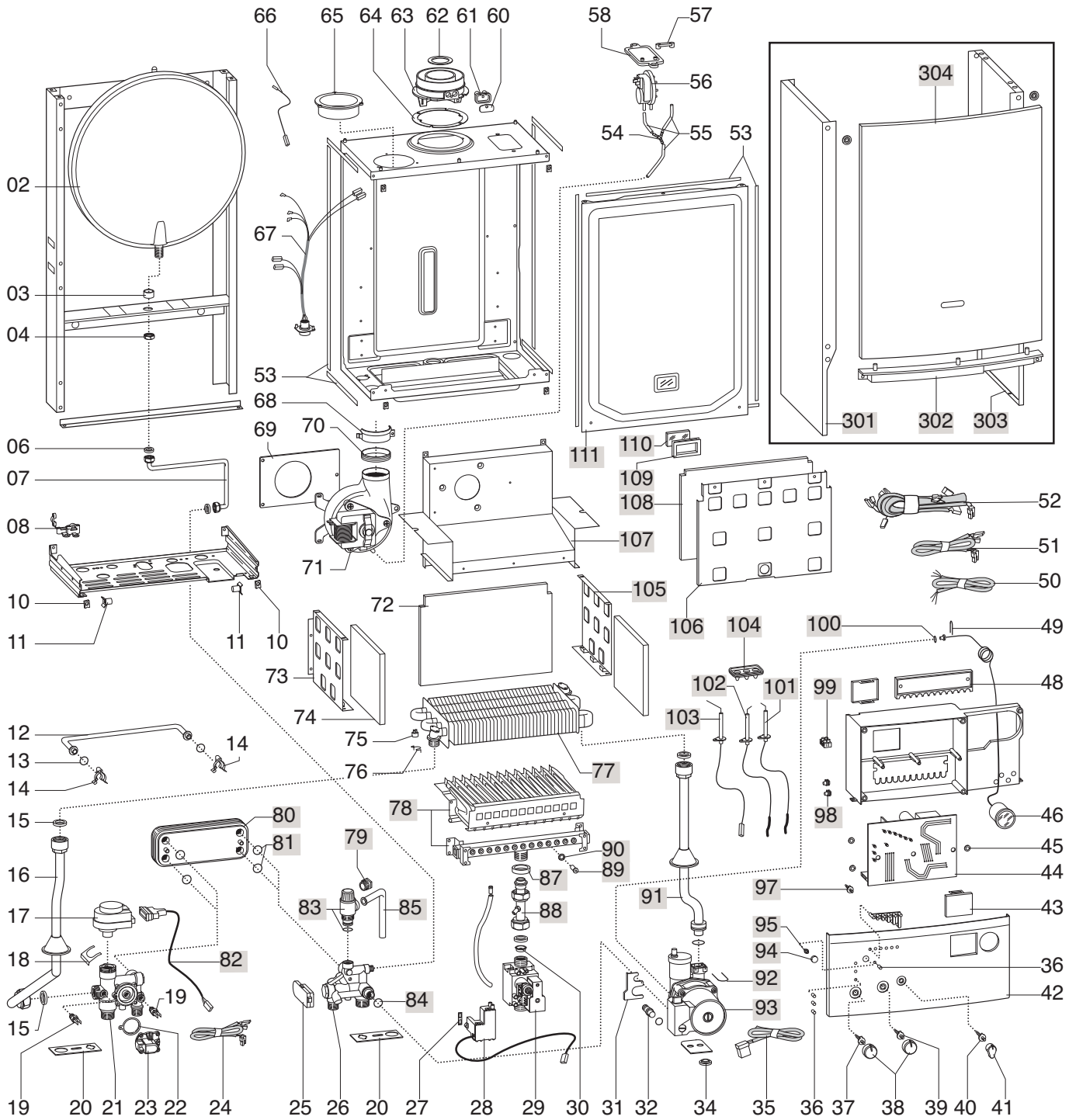
66 65 64 63 62 61 60
58 57
56
54 55 53
304
02
67
03
04
53
68
69 70
06
07
08
71
10
11
11 10
72
73
74
75
76
77
78
79
80
81
82
83 85
84
87
88
89
90
91
92
93
94
95
97
98
99
100
101
102
103
104
105
106
107
108
109
110
111
301 302 303
52
51
50
49
48
46
45
44
43
36
42
12
13
14
14
15
16
17
18
19
15
19 20 21 23 22 24 25 26 20 27 28 29 30 31 32 34 35 36 37 38 39 40 41
311
312

R8224940

	Description	Manf. Pt. N	Type	1 LINDA+24 CS CPR B	2 LINDA+24 CS CPR N	3	4	5	6	7	8	9	10	11	12	13	14	15	16	17	18	From	to
0002	EXPANSION VESSEL 6L	998616		●	●																		
0003	BUSH (EXPANSION VESSEL)	998776		●	●																		
0004	LOCK NUT 3/8"	998581		●	●																		
0006	GASKET 3/8"	573521		●	●																		
0007	PIPE (EXPANSION VESSEL)	999102		●	●																		
0008	CABLE HOLDER	998580		●	●																		
0010	SPRING (FASTENING)	570717		●	●																		
0011	PIVOT	995492		●	●																		
0012	BY-PASS PIPE	998589		●	●																		
0013	O-RING	998077		●	●																		
0014	SPRING (BY-PASS PIPE)	998064		●	●																		
0015	GASKET 3/4"	573520		●	●																		
0016	PIPE (C.H. FLOW)	999978		●	●																		
0017	MOTOR (3-WAY VALVE)	997147		●	●																		
0018	FIXING CLIP (MOTOR)	997077		●	●																		
0019	TEMPERATURE PROBE	998458		●	●																		
0020	GASKET (ANTI-VIBRATION)	999601		●	●																		
0021	FLOW GROUP	65105060		●	●																		
0022	DIAPHRAGM (MAIN FLOW SWITCH)	571547		●	●																		
0023	MAIN FLOW SWITCH KIT	65100519		●	●																		
0024	CABLE (TEMPERATURE PROBES)	65101322		●	●																		
0025	D.H.W. FLOW SWITCH	999075		●	●																		
0026	RETURN GROUP	999673		●	●																		
0027	GASKET (SPARK GENERATOR)	574279		●	●																		
0028	SPARK GENERATOR (KIT)	65100514		●	●																		
0029	GAS VALVE	997089		●	●																		
0030	VALVE GAS DIAPHRAGM D=4.9	999974		●																			
0031	PUMP BRACKET	999162		●	●																		
0032	PUMP PLUG	999598		●	●																		
0034	LOCK WASHER	999100		●	●																		
0035	CABLE (P.C.B. - PUMP)	999968		●	●																		
0036	LED (L=10.8)	998576		●	●																		
0037	SPINDLE (TEMPERATURE KNOB)	998578		●	●																		
0038	REGULATION KNOB	995384		●	●																		
0039	SPINDLE (TEMPERATURE KNOB)	998575		●	●																		
0040	SPINDLE (ON/OFF KNOB)	998574		●	●																		
0041	ON-OFF KNOB	995383		●	●																		
0042	CONTROL PANEL	995985		●	●																		
0043	COVER	997745		●	●																		
0044	BOX CMP3-MCU HS MI/MFFI 3S	65101732		●	●																		
0045	NYLON BUSH (10MM)	569711		●	●																		
0046	PRESSURE GAUGE	65100695		●	●																		
0048	CABLE HOLDER COVER	998953		●	●																		
0049	U-CLIP	571548		●	●																		
0050	CABLE (POWER SUPPLY)	65101073		●	●																		
0051	LOW VOLTAGE WIRING	998863		●	●																		
0052	HIGH VOLTAGE WIRING	995317		●	●																		
0053	GASKET (ADHESIVE - 14X6 MM)	65102772		●	●																		
0054	Y PIECE (AIR PRESSURE)	573327		●	●																		
0055	COMPENSATION TUBE	573576		●	●																		
0056	AIR PRESSURE SWITCH 55 Pa	998484-01		●	●																		
0057	AIR INTAKE COVER	573329		●	●																		
0058	SUPPORT PLATE	997203		●	●																		
0060	COVER (FLUE TEST POINT)	998565		●	●																		
0061	GASKET (FLUE TEST POINT)	998636		●	●																		
0062	RESTRICTOR (D=43)	999980		●	●																		
0063	FLUE (EXHAUST MANIFOLD / HEADER)	999561		●	●																		
0064	GASKET (FLUE COLLAR)	998637		●	●																		
0065	PLUG (AIR INTAKE)	998595		●	●																		
0066	EARTH CABLE (FAN)	999925		●	●																		
0067	CABLE (FAN/AIR PRESSURE SWITCH)	65101357		●	●																		
0068	FIXING CLAMP (FAN)	998566		●	●																		
0069	PANEL (INSULATION - FAN)	999135		●	●																		
0070	GASKET (FAN)	65100707		●	●																		
0071	FAN	999397		●	●																		
0072	PANEL (INSULATION - REAR)	998640		●	●																		
0073	PANEL (L.H. SIDE)	995893		●	●																		
0074	PANEL (INSULATION - SIDE)	998639		●	●																		
0075	OVERHEAT THERMOSTAT 100°C	996065		●	●																		
0076	FIXING SPRING (OVERHEAT THERM.)	998583		●	●																		

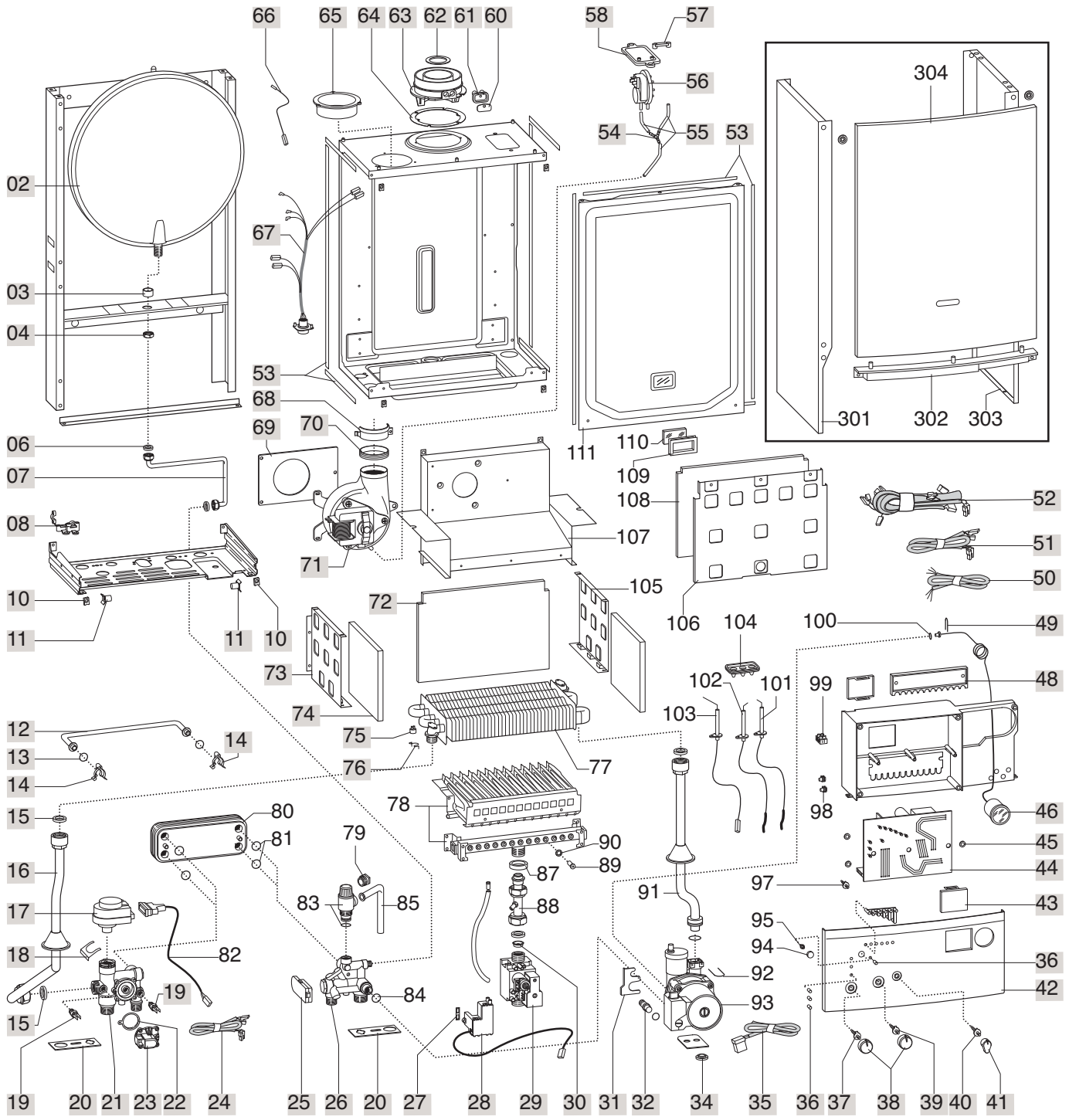
66 65 64 63 62 61 60 58 57
56
54 55 53
304
02
67
03
04
53
68
69 70
06
07
08
71
10
11
11 10
72
73
74
75
76
77
78
79
80
81
82
83 85
84
87
88
89
90
91
92
93
94
95
97
98
99
100
101
102
103
104
105
106
107
108
109
110
111
301 302 303
52
51
50
49
48
46
45
44
43
36
42
12
13
14
14
15
16
17
18
19
15
19 20 21 23 22 24 25 26 20 27 28 29 30 31 32 34 35 36 37 38 39 40 41
311
312

R8224940

	Description	Manf. Pt. N	Type	LINDA+24 CS CPR B	LINDA+24 CS CPR N	3	4	5	6	7	8	9	10	11	12	13	14	15	16	17	18	From	to
0077	HEAT EXCHANGER	998620		●	●																		
0078	BURNER	996158		●																			
	BURNER	998669			●																		
0079	NUT	998567		●	●																		
0080	DHW HEAT EXCHANGER	571646		●	●																		
0081	O-RING 4075 3,53 X 18,64	573825		●	●																		
0082	CABLE (POWER SUPPLY - MOTOR)	996336		●	●																		
0083	PRESSURE RELIEF VALVE (1/2" 3 BAR)	573172		●	●																		
0084	O-RING	998424		●	●																		
0085	PIPE - PRESSURE RELIEF VALVE	573176		●	●																		
0087	SILICONE SEAL	569443		●	●																		
0088	PIPE (GAS INLET)	999622		●	●																		
0089	BURNER JET (L.P.G. 0.77)	998434			●																		
	BURNER JET (NG 1.30)	998433		●																			
0090	BURNER JET WASHER	572138		●	●																		
0091	PIPE (C.H. RETURN)	998732		●	●																		
0092	U-CLIP	997153		●	●																		
0093	KIT FOR REAR PUMP ATTACHMENT	996614		●	●																		
0094	KNOB (RESET)	995382		●	●																		
0095	RESET BUTTON (INSERT)	998573		●	●																		
0097	SPINDLE (COMFORT)	65100842		●	●																		
0098	BLIND GROMMET	569720		●	●																		
0099	CONNECTOR BLOCK	571787		●	●																		
0100	O-RING	998517		●	●																		
0101	IGNITION ELECTRODE (R.H.)	65100251		●	●																		
0102	IGNITION ELECTRODE (L.H.)	65100250		●	●																		
0103	IONIZATION ELECTRODE	998624		●	●																		
0104	IGNITION ELECTRODE CABLE RUBBER	998147		●	●																		
0105	PANEL (R.H. SIDE)	995892		●	●																		
0106	FRONT PANEL	65100555		●	●																		
0107	FLUE HOOD	65102262		●	●																		
0108	PANEL (INSULATION - FRONT)	995995		●	●																		
0109	SIGHT GLASS - GASKET	65105371		●	●																		
0110	SIGHT GLASS	998075		●	●																		
0111	PANEL (FRONT - SEALED CHAMBER)	65105370		●	●																		
0301	CASE PANEL (L.H. SIDE)	998477		●	●																		
0302	FRONT PANEL CROSSBAR	991944		●	●																		
0303	CASE PANEL (R.H. SIDE)	998476		●	●																		
0304	CASE PANEL (FRONT)	998442		●	●																		
0311	BURNER JET FULL KIT (NG)	998716		●	●																		
0312	BURNER JET FULL KIT (LPG)	998717		●	●																		

LIST OF THE ABBREVIATIONS

HW	:	Hot water.
CW	:	Cold water.
C	:	Ceramic resistance (normal heating).
Ca	:	Ceramic resistance (accelerated heating)
TP	:	Immersion heater.
1F	:	With fittings.
2F	:	Without fittings.
3F	:	With fittings and another outlet connection.
AMI	:	With mixing valve.
SMI	:	Without mixing valve.
PUISS	:	Power of th appliance.
PN	:	Appliance with normal pression.
LP	:	Appliance with low pression.
PV	:	Appliance with variable power.
PF	:	Appliance with fixed power.

IDENTIFICATION PLATE

SERIAL NUMBER

7 Characters : 00001 / K A

- Sequencial number
- Trimester of manufacture : from A to D
- Year of manufacture : K → 2003, L → 2004, M → 2005, etc ...

8 Characters : 00001 / L 09

- Sequencial number
- Month of manufacture
- Year of manufacture : K → 2003, L → 2004, M → 2005, etc ...

11 Characters : 2007 1370 P 07

- Year of manufacture
- Month of manufacture
- Year of manufacture : P → 2007, R → 2008, S → 2009, T → 2010, U → 2011, W → 2012, X → 2013, Y → 2014, Z → 2015
- Sequencial number

21 Characters : 3122099 xx 1449214321

- Product reference
- Year of manufacture
- Sequencial number
- Year of manufacture

The indications mentionned on the prices, commercial or technical literature and the scheme are written for your guidance and are available at a given time. The CONSTRUCTOR retains the power to modify the presentation, the form, the size, the conception or the material of the products.