RXYSQ4,5,6P8V1B

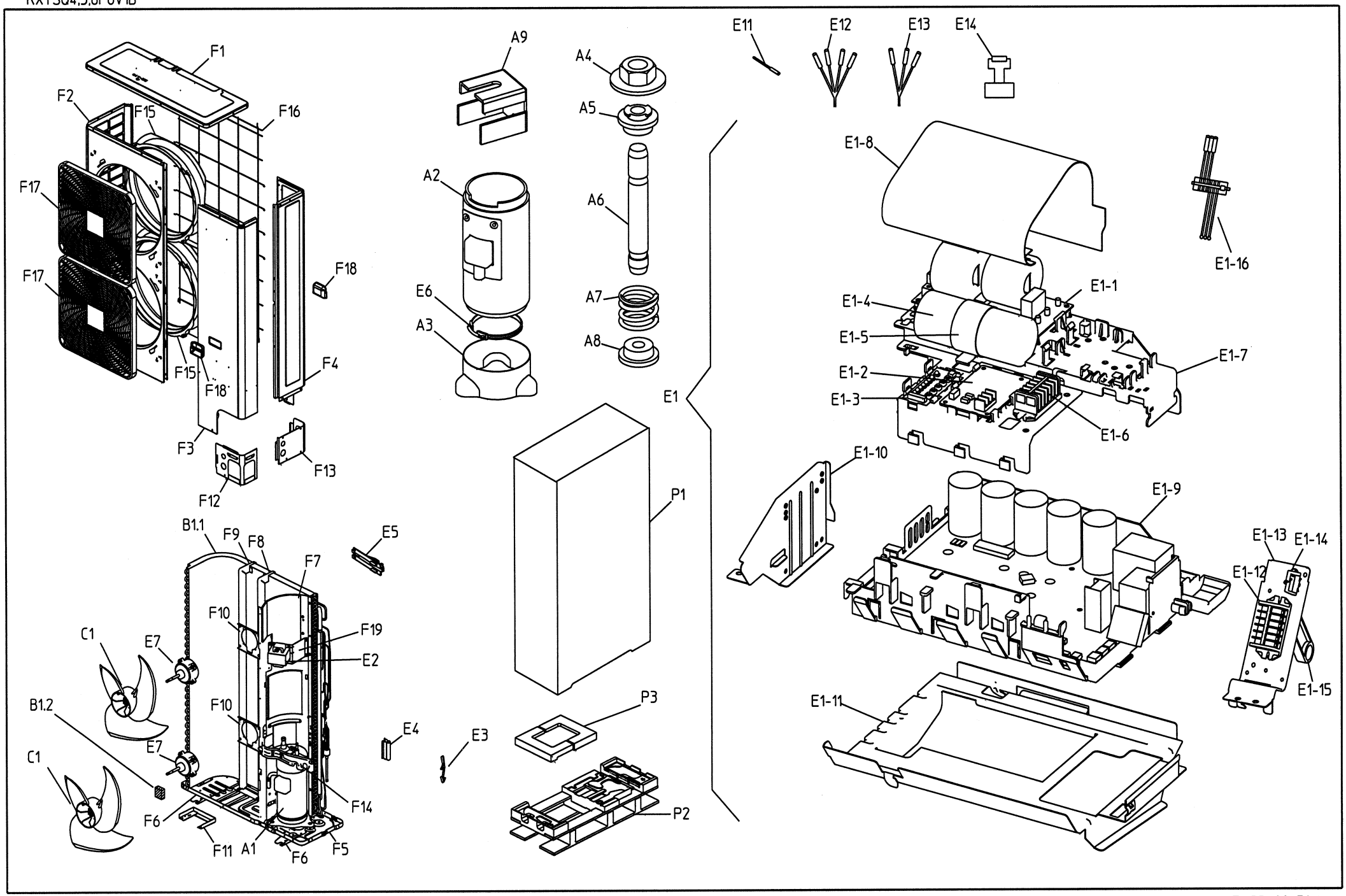

4TW33629-50.1

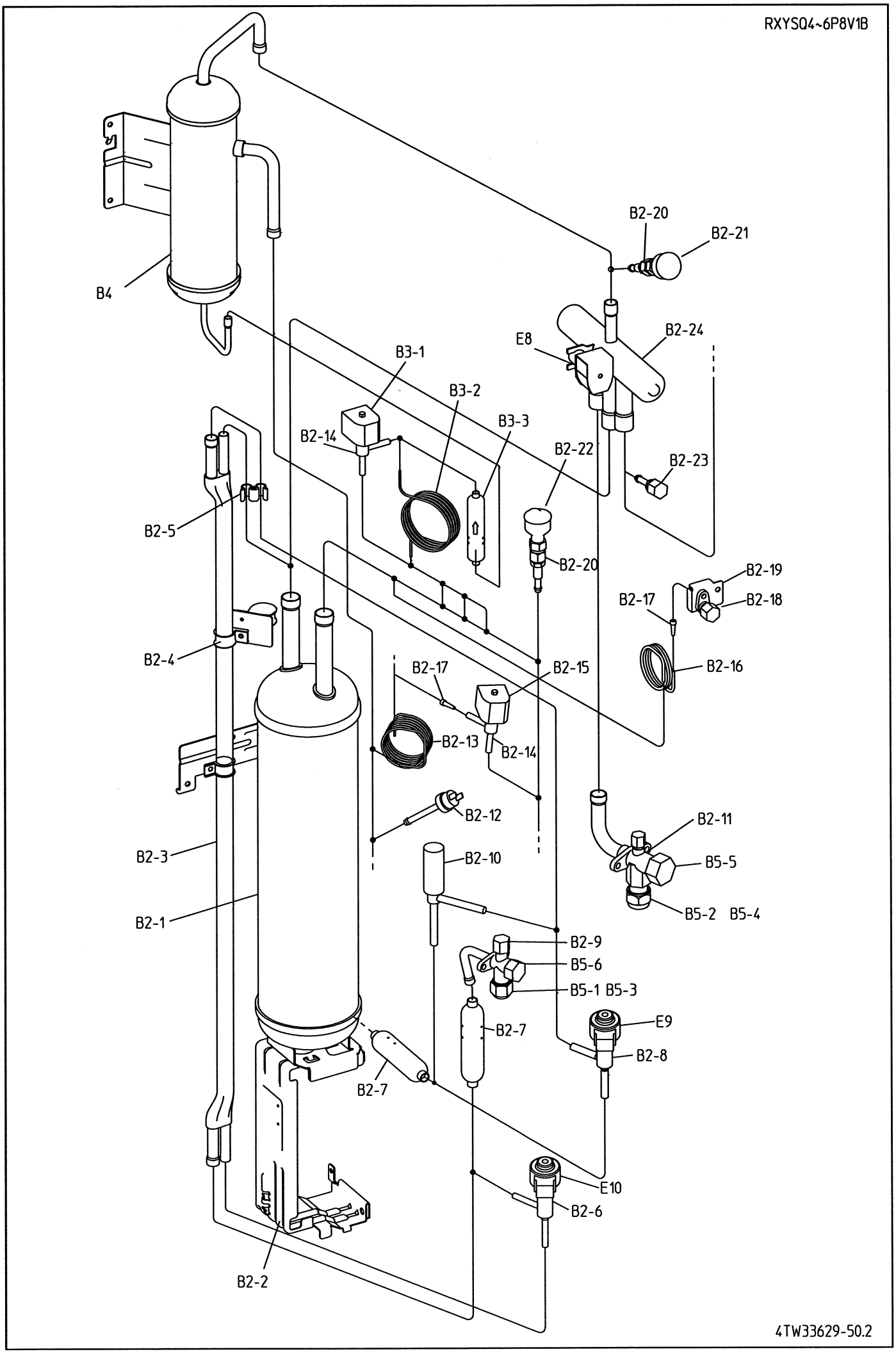
RXYSQ4~6P8V1B
B2-20
B2-21
B4
B2-24
E8
B3-1
B3-2
B3-3
B2-14
B2-22
B2-23
B2-5
B2-20
B2-19
B2-17
B2-18
B2-4
B2-17
B2-15
B2-16
B2-13
B2-14
B2-12
B2-11
B2-3
B2-10
B5-5
B2-1
B5-2 B5-4
B2-9
B5-6
B5-1 B5-3
E9
B2-7
B2-8
B2-7
E10
B2-6
B2-2
4TW33629-50.2