RXYSQ4~6P8Y1B

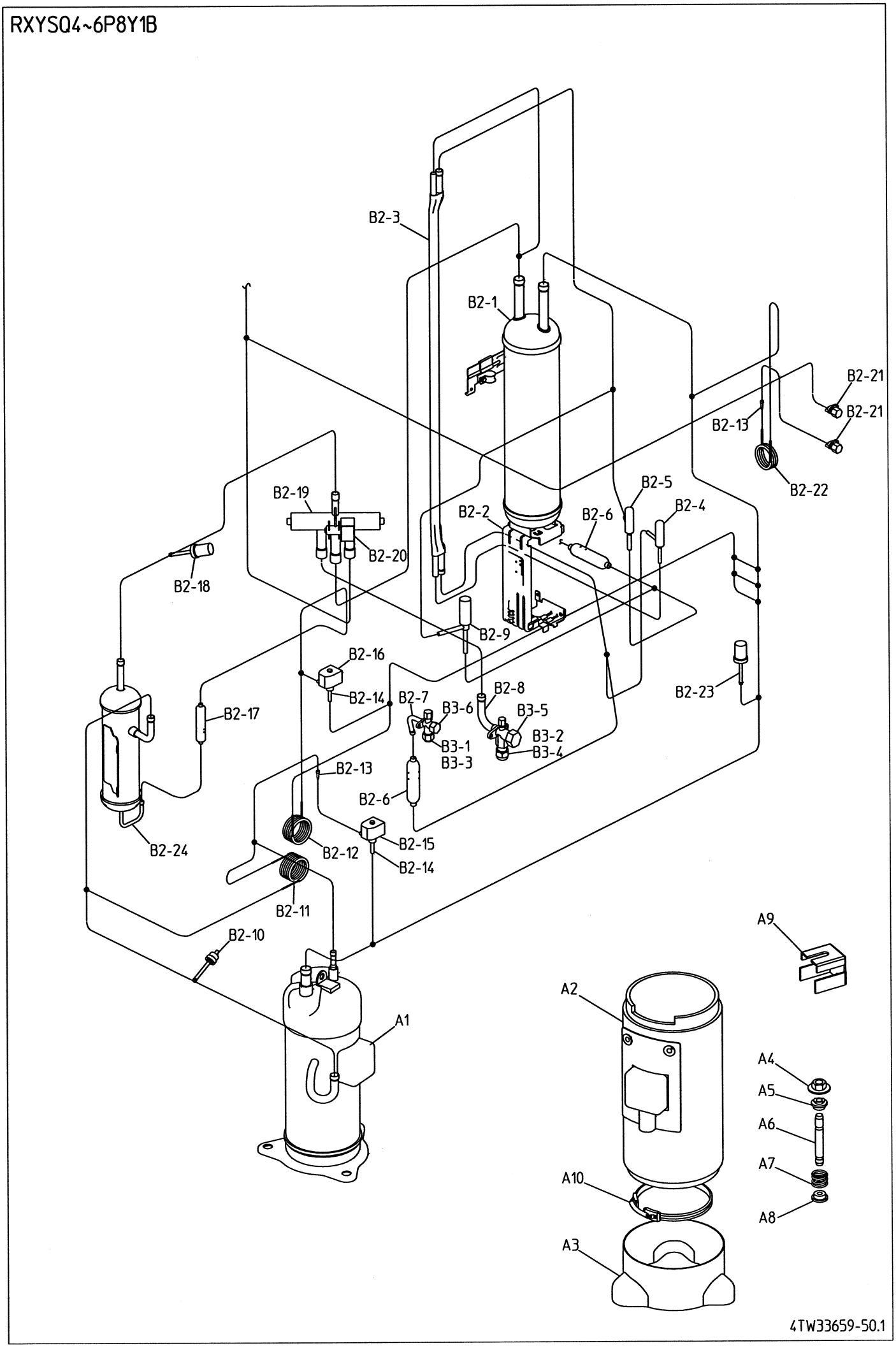

RXYSQ4~6P8Y1B

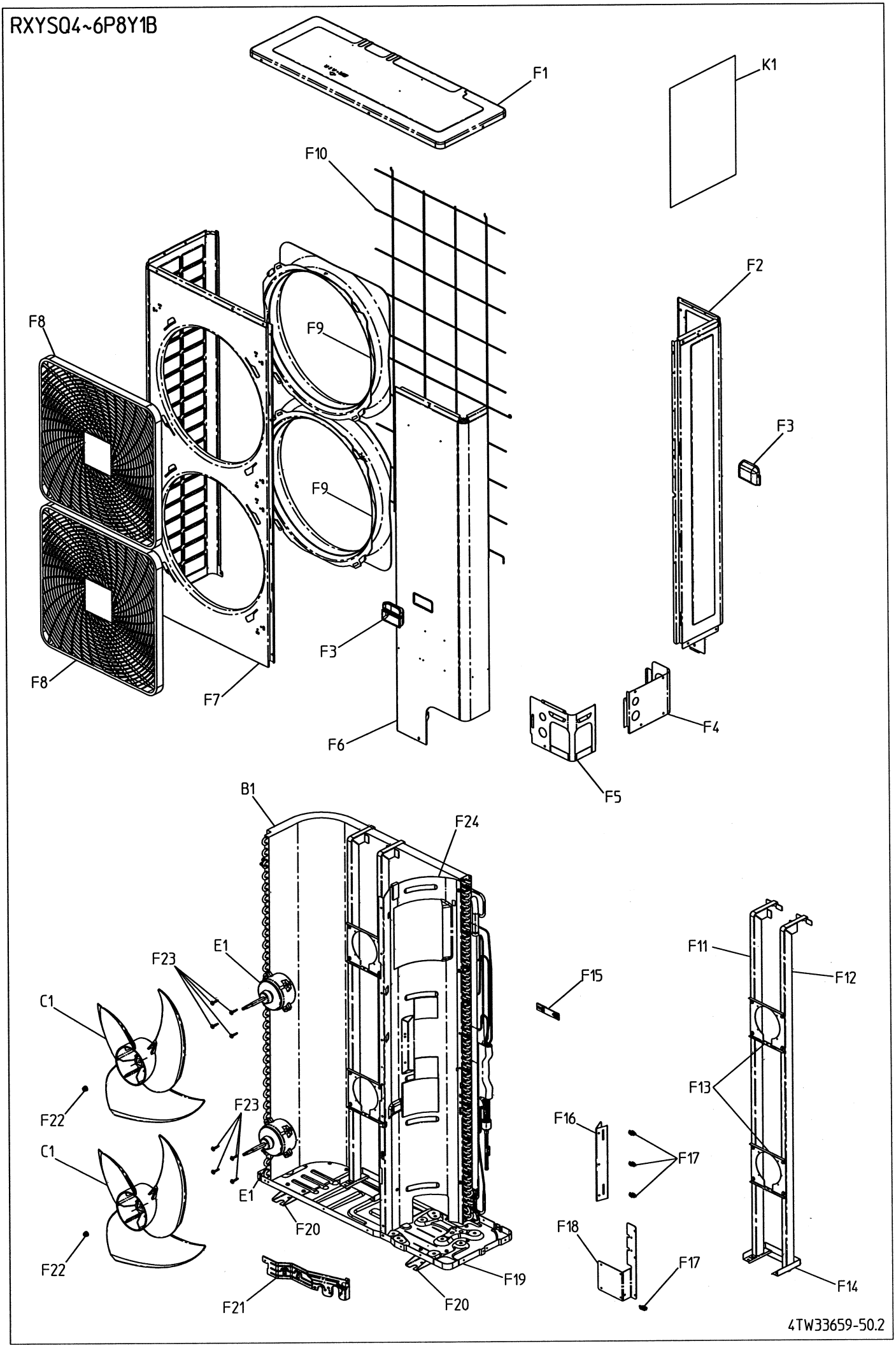

RXYSQ4~6P8Y1B

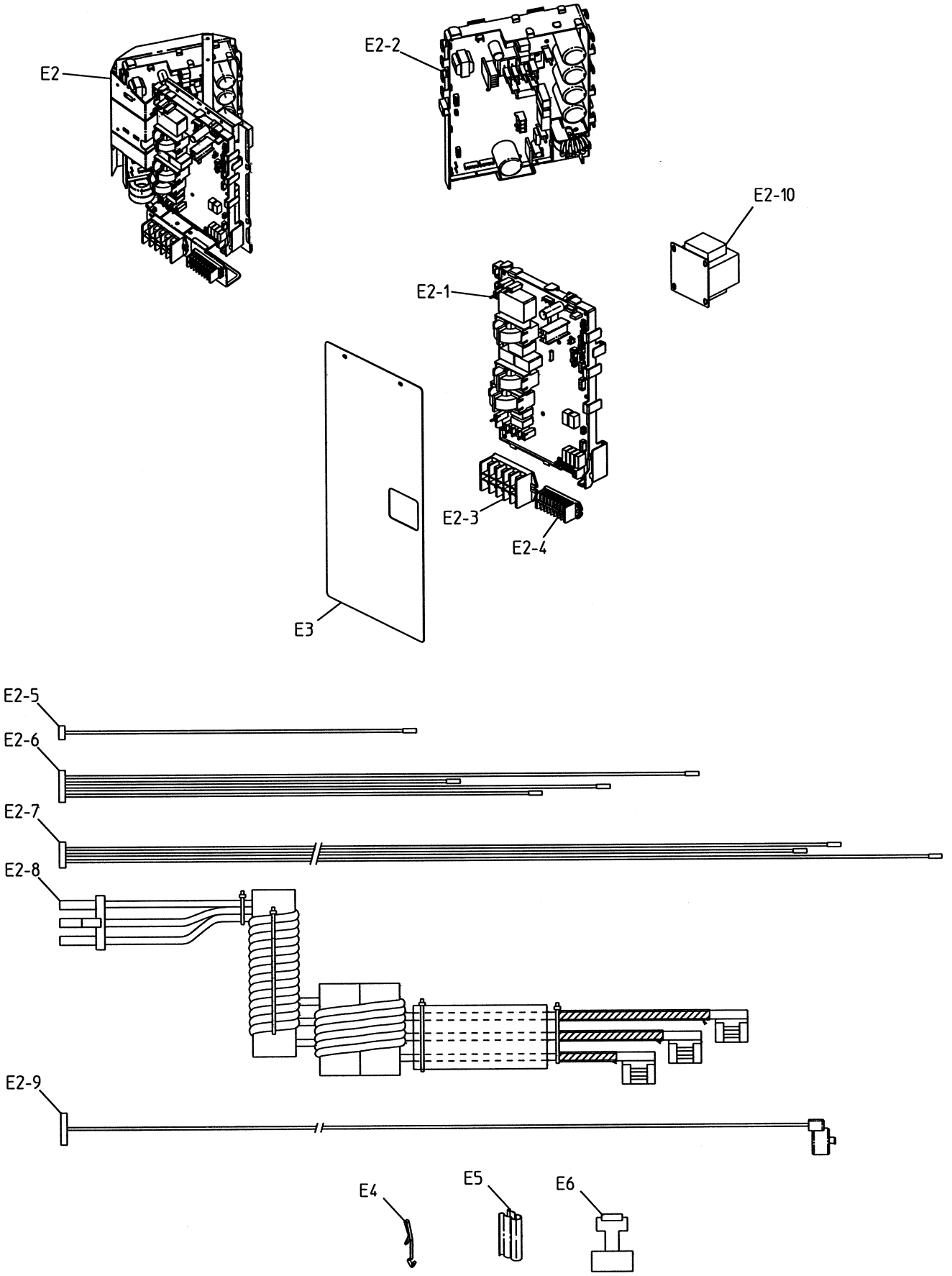

4TW33659-50.3