RXF272VC
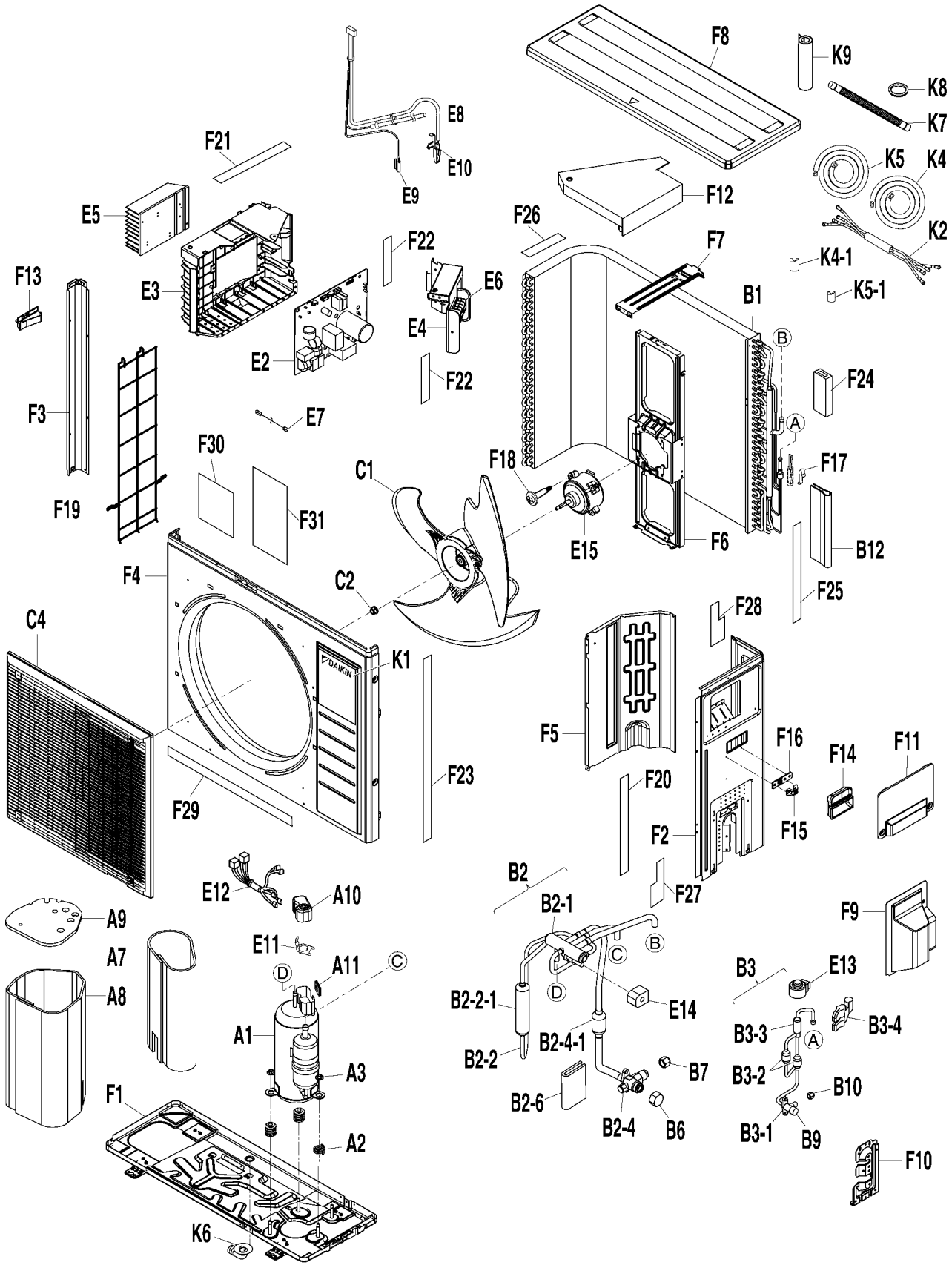
– TOP –