FWXT10ATV3 - FWXT15ATV3 - FWXT20ATV3

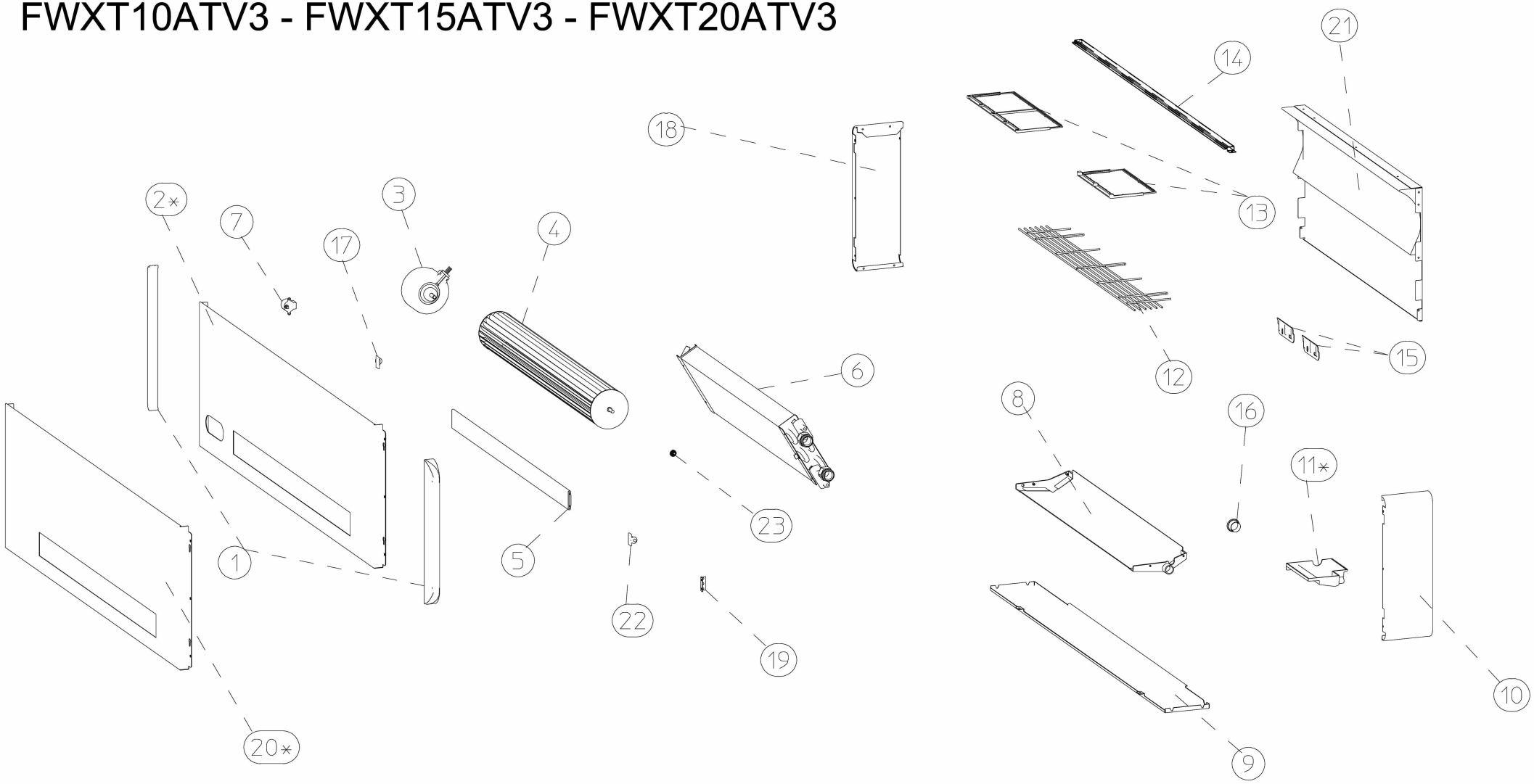

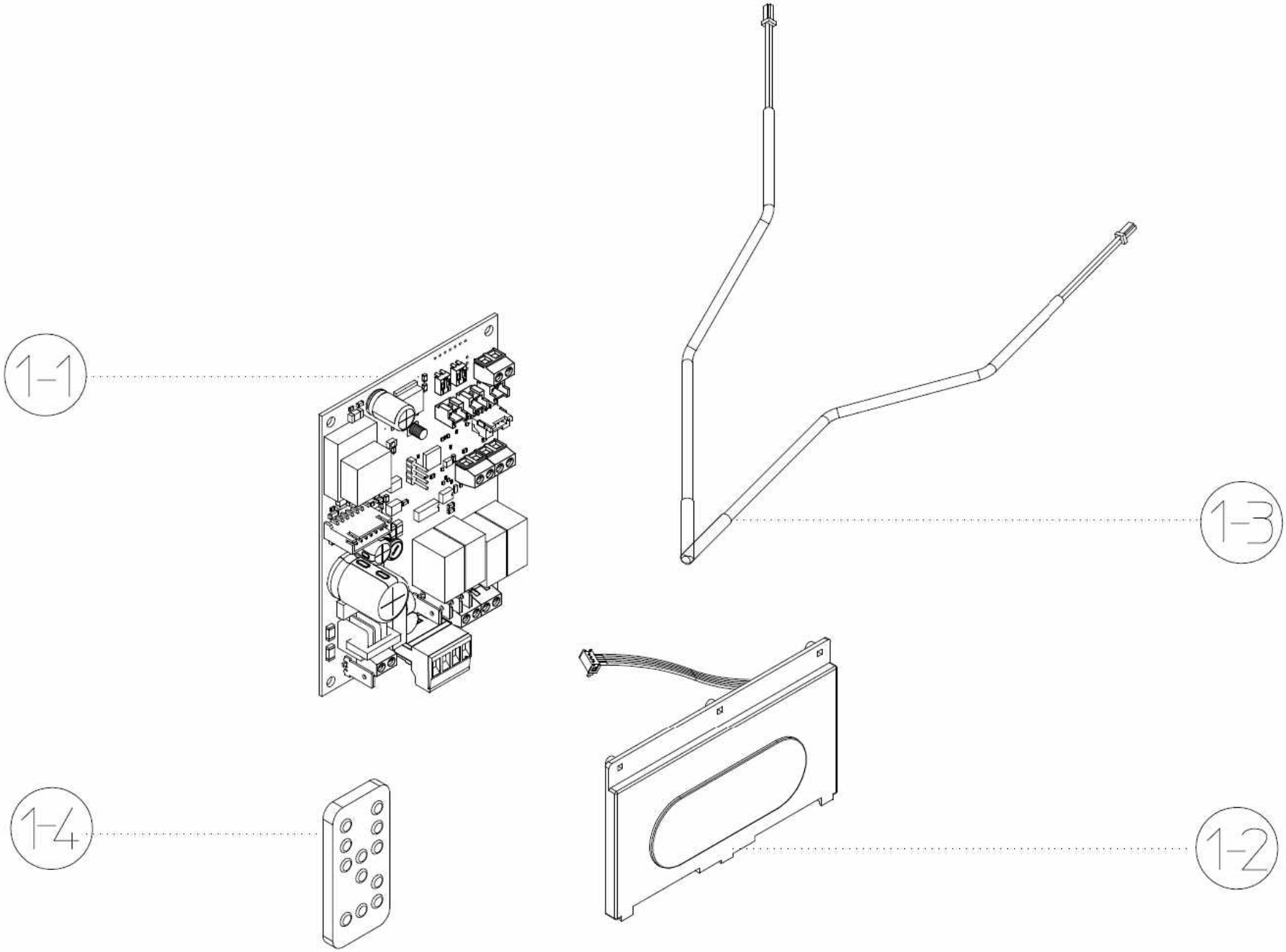
1-1
1-3
1-4
1-2