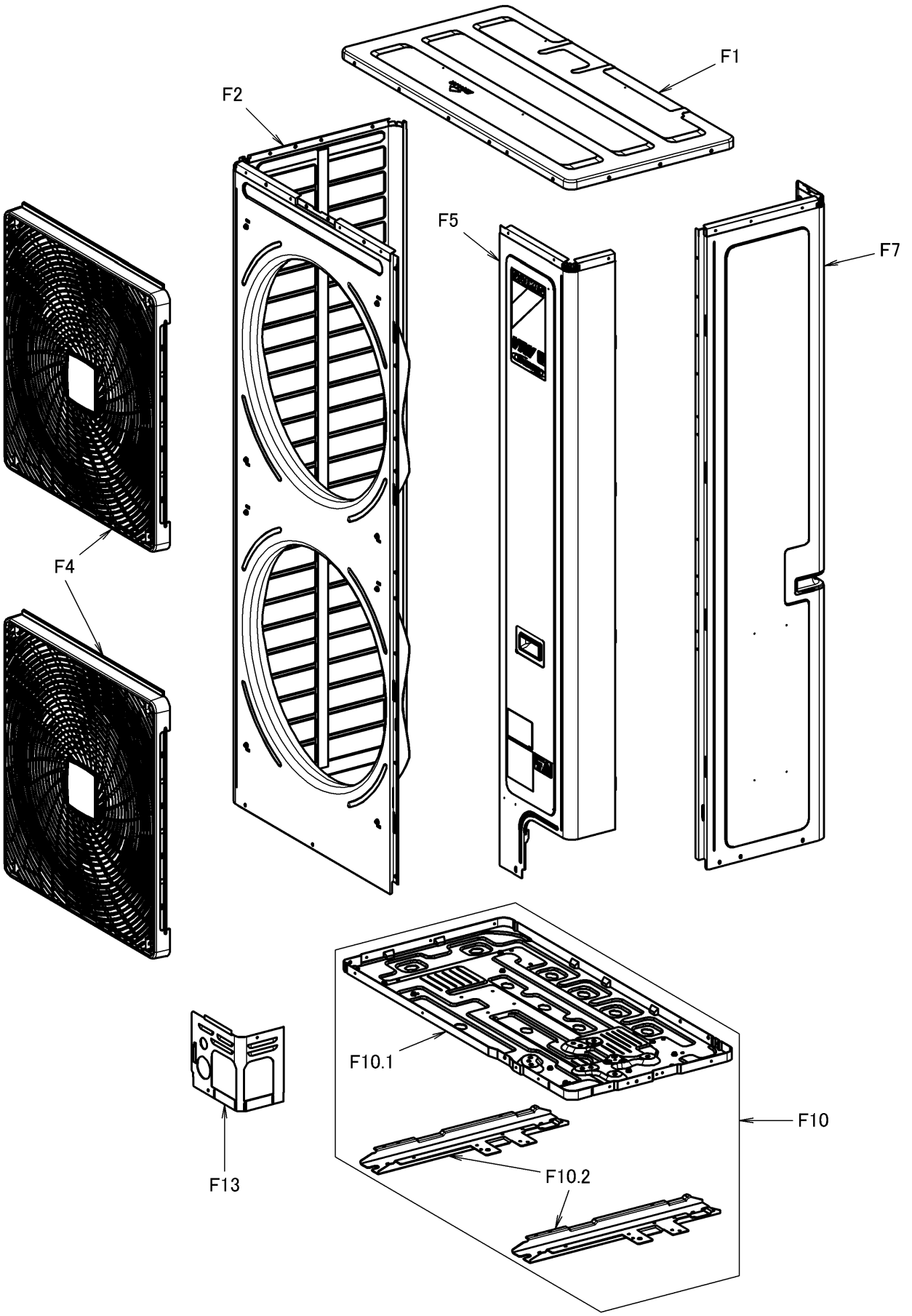
F1
F2
F5
F7
F4
F10.1
F10
F10.2
F13

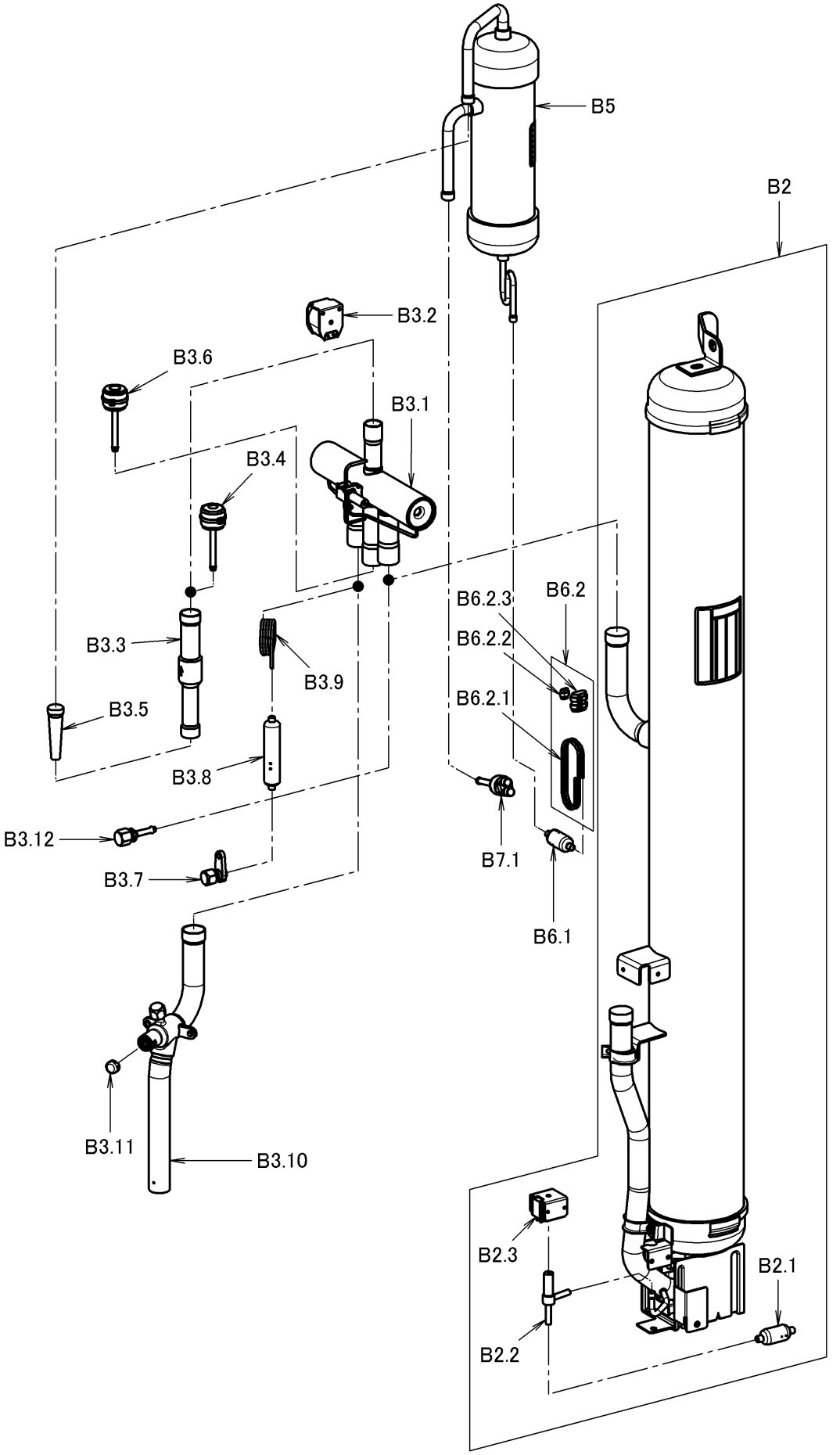
B5
B2
B3.2
B3.6
B3.1
B3.4
B6.2.3
B6.2
B3.3
B6.2.2
B3.9
B6.2.1
B3.5
B3.8
B3.12
B7.1
B3.7
B6.1
B3.11
B3.10
B2.3
B2.1
B2.2

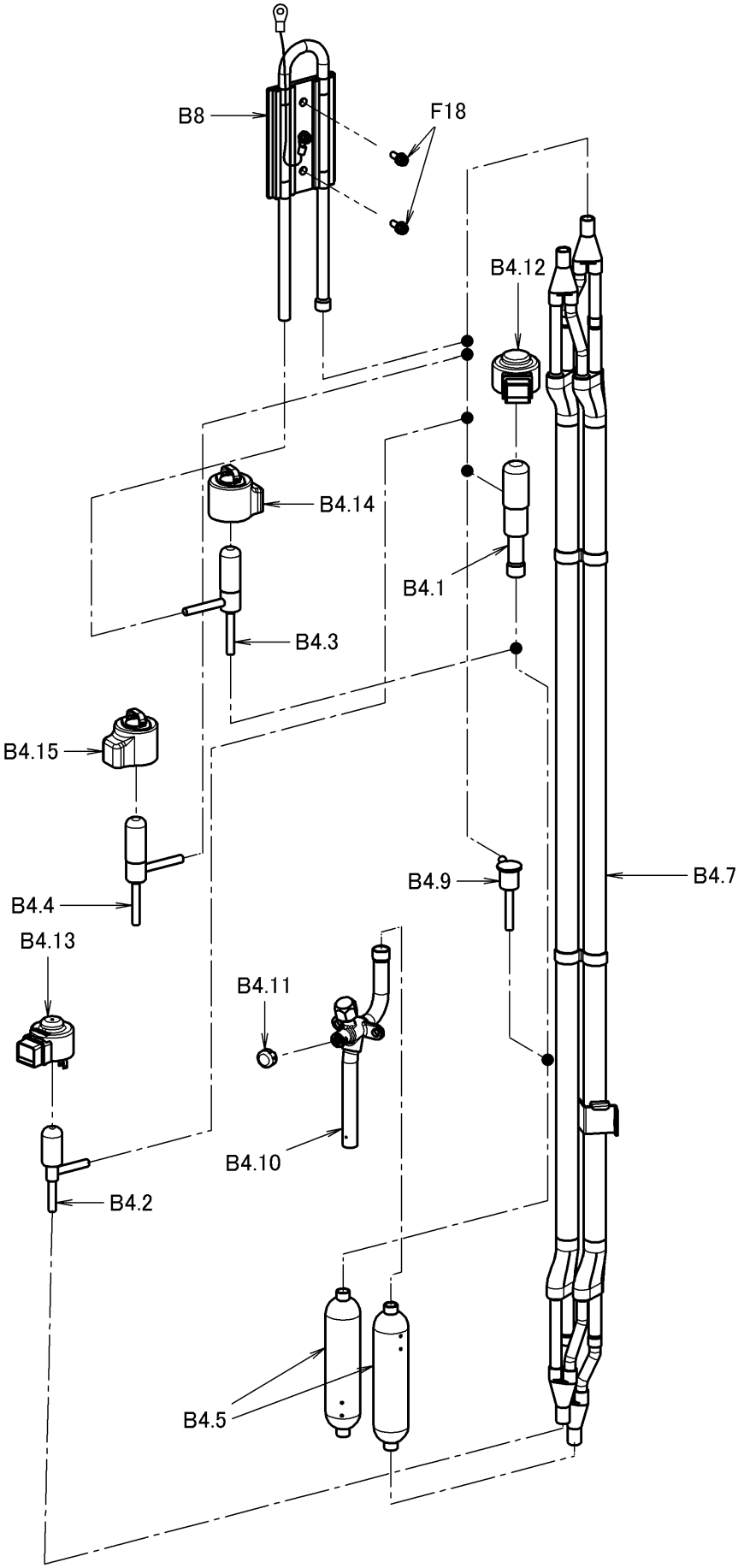
B8
F18
B4.12
B4.14
B4.1
B4.3
B4.15
B4.9
B4.7
B4.4
B4.13
B4.11
B4.10
B4.2
B4.5