RXF125KC5
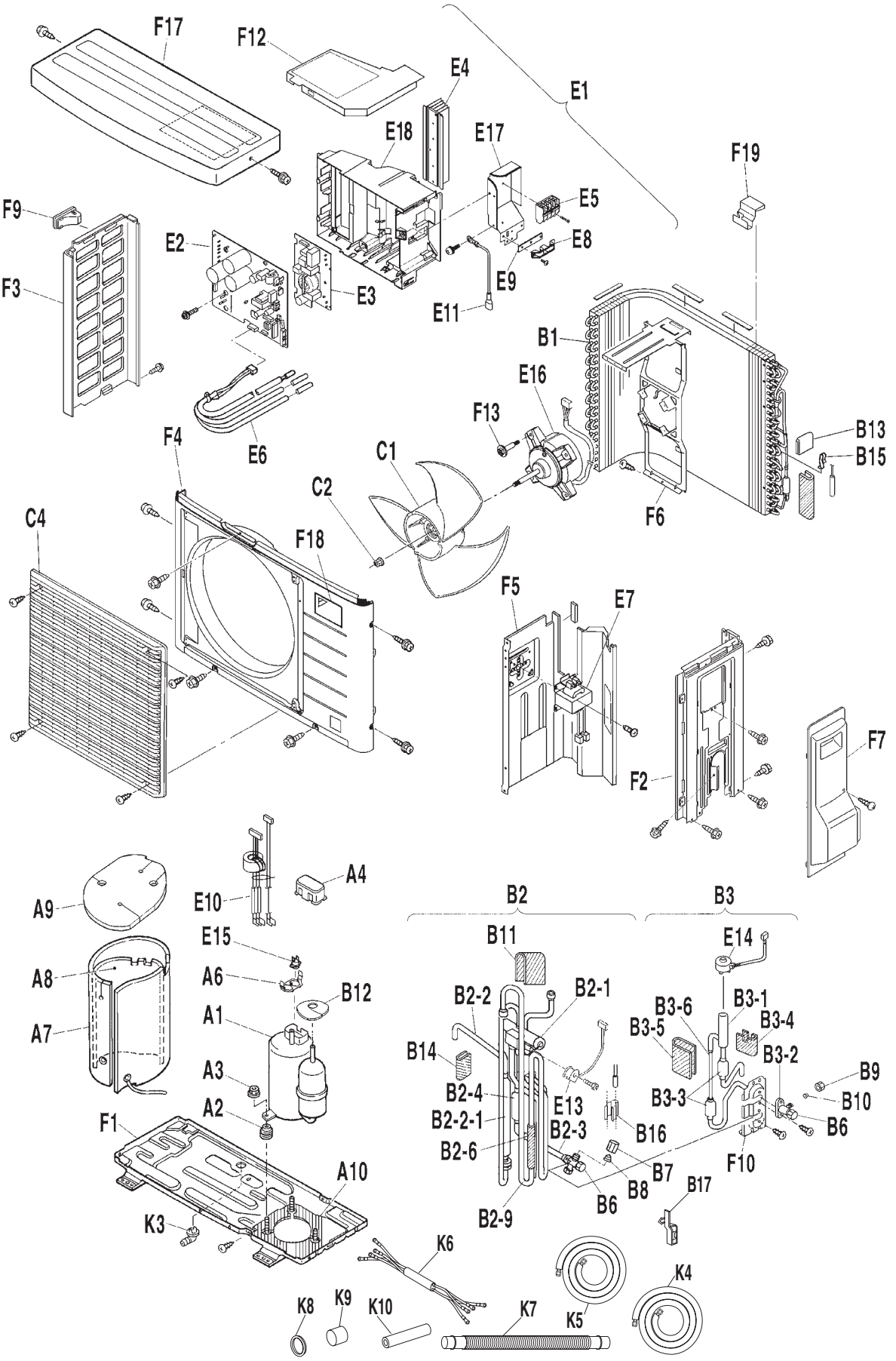
– TOP –