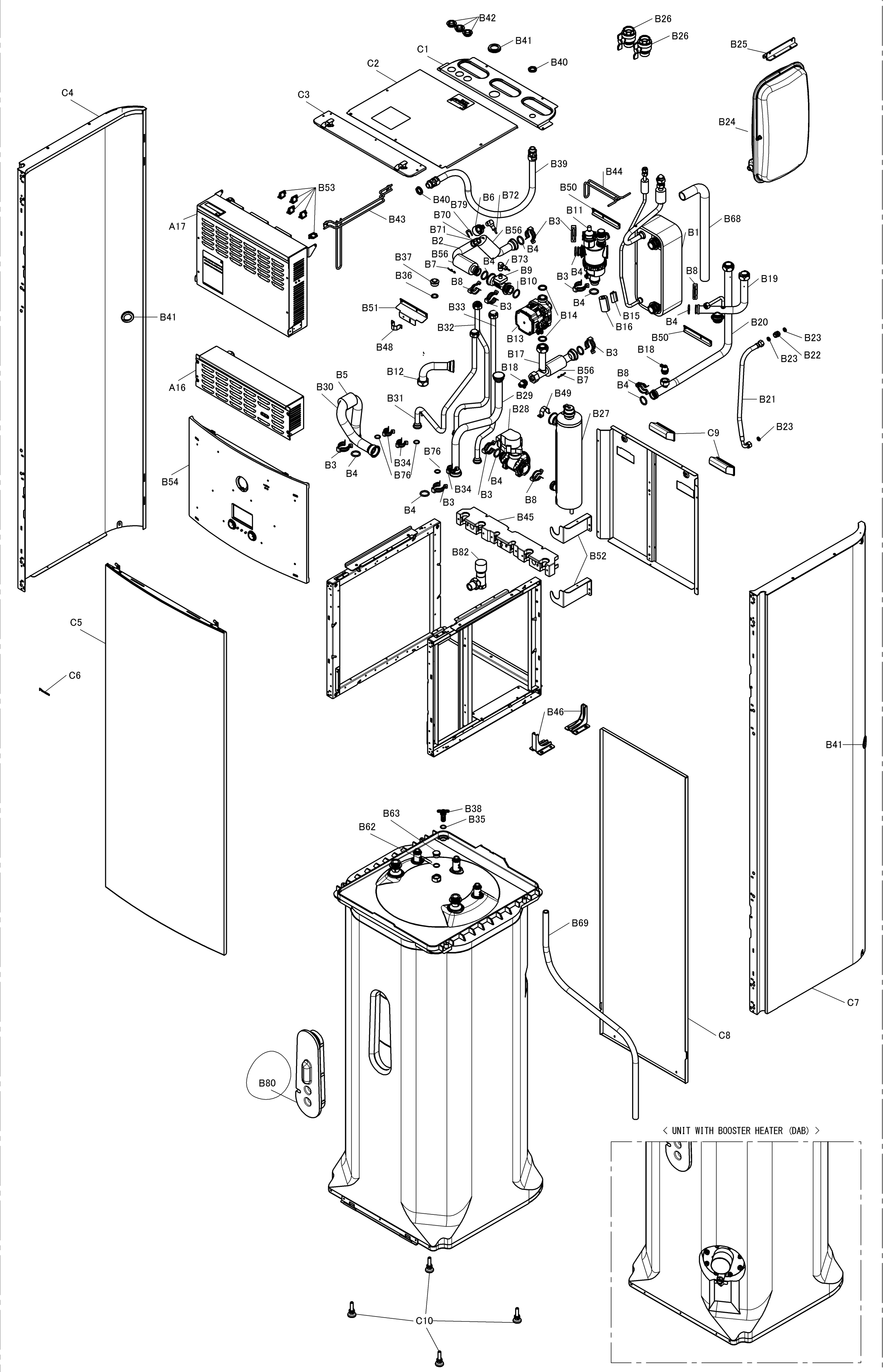
B42
B41
B40
B26
B26
B25
C1
C2
C3
C4
B24
B39
B44
B50
B11
B68
B1
B53
B40
B79
B6
B72
B43
A17
B70
B71
B2
B56
B3
B4
B56
B4
B73
B7
B9
B37
B36
B8
B10
B3
B4
B8
B19
B4
B51
B33
B3
B14
B15
B16
B41
B32
B13
B20
B50
B23
B48
B17
B3
B18
B23
B22
B12
B18
B56
B7
B8
B4
B5
B30
B29
B49
B21
A16
B31
B28
B27
C9
B23
B3
B4
B34
B76
B76
B34
B4
B3
B3
B8
B4
B54
B45
B82
B52
C5
C6
B46
B41
B38
B35
B63
B62
B69
C7
C8
B80
C10
< UNIT WITH BOOSTER HEATER (DAB) >

< PLATE HEAT EXCHANGER ASSY >

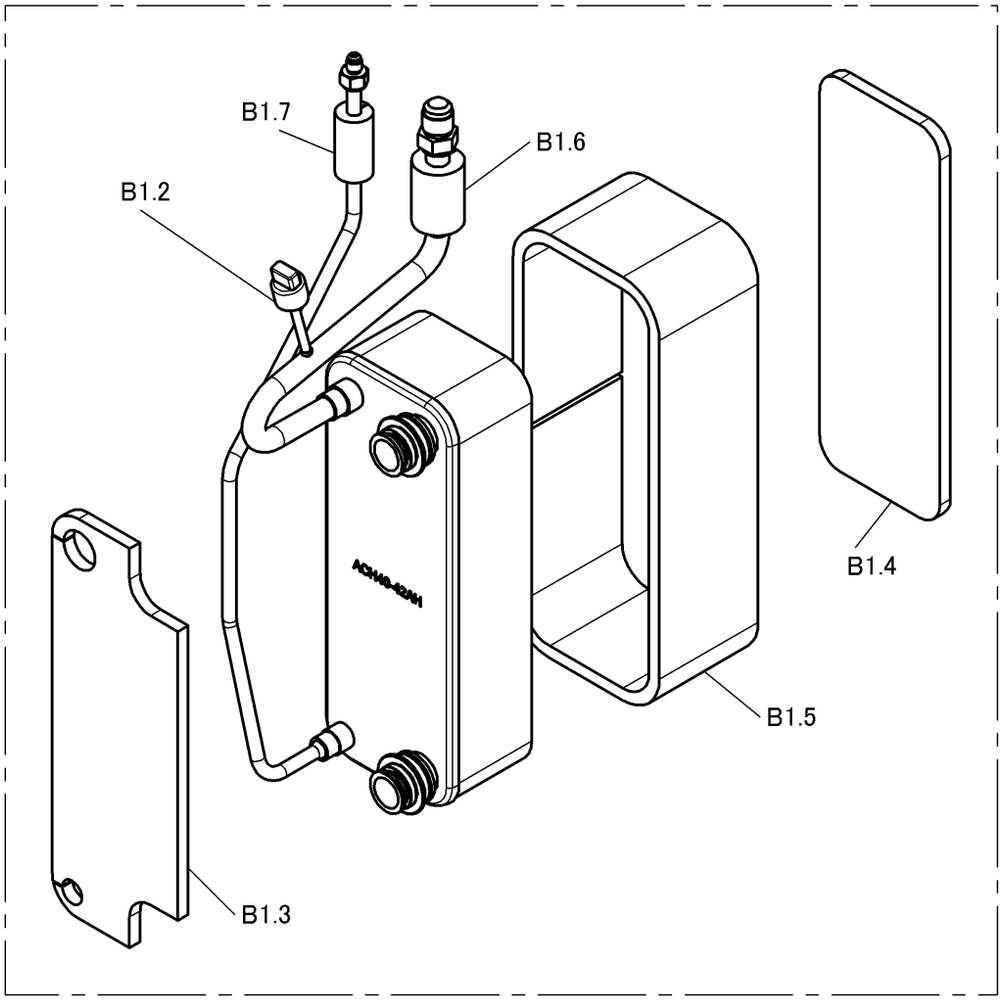

< BOOSTER HEATER >

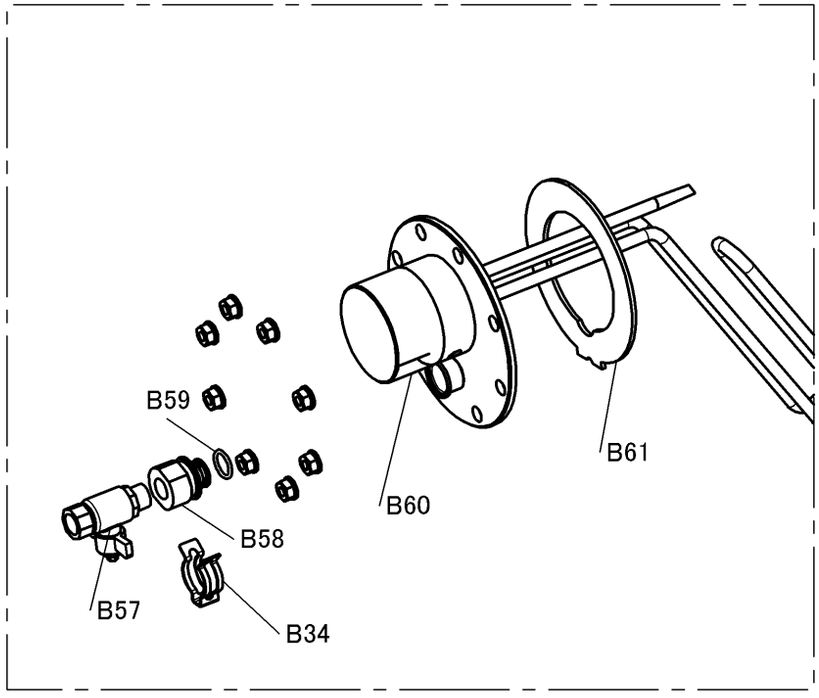

< BACK UP HEATER >

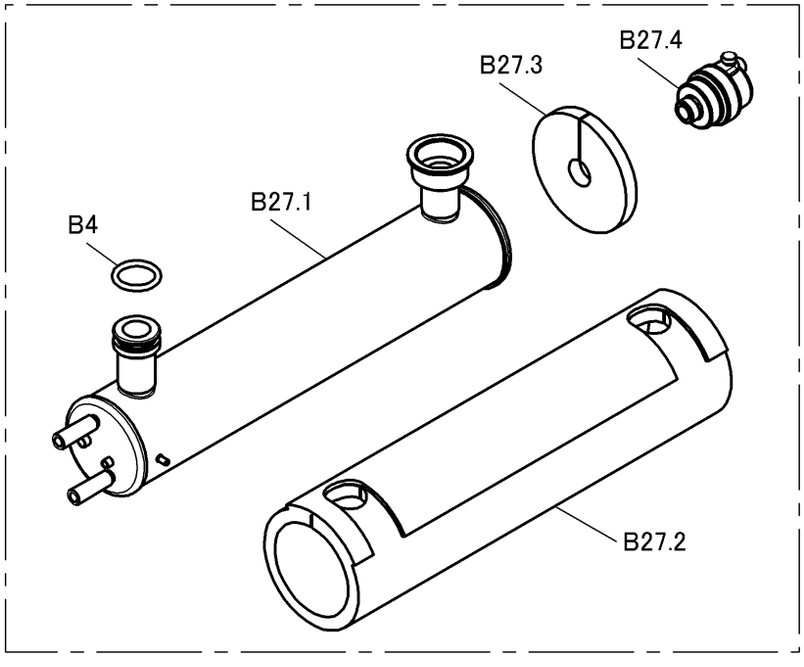

< NO BACK UP HEATER (DAB) >

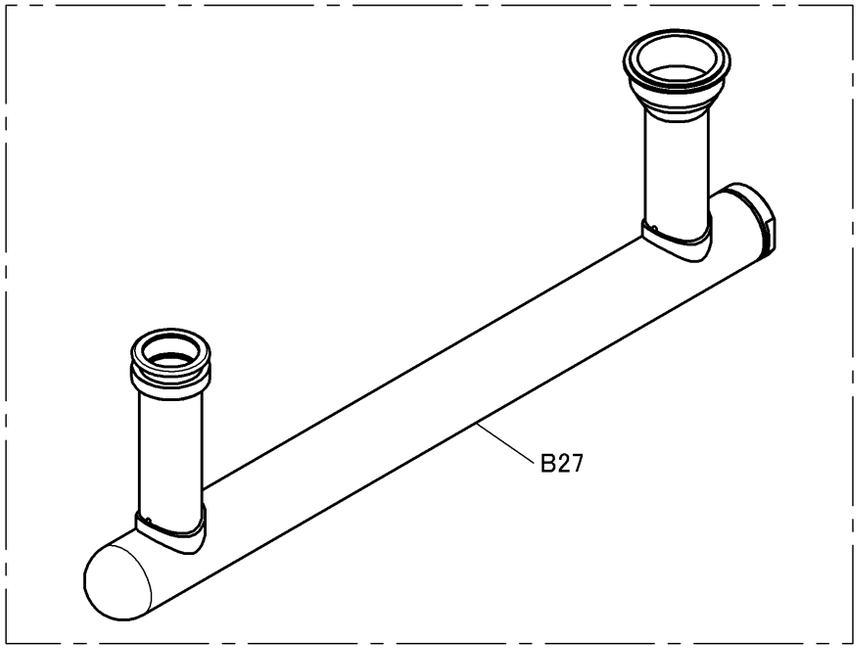

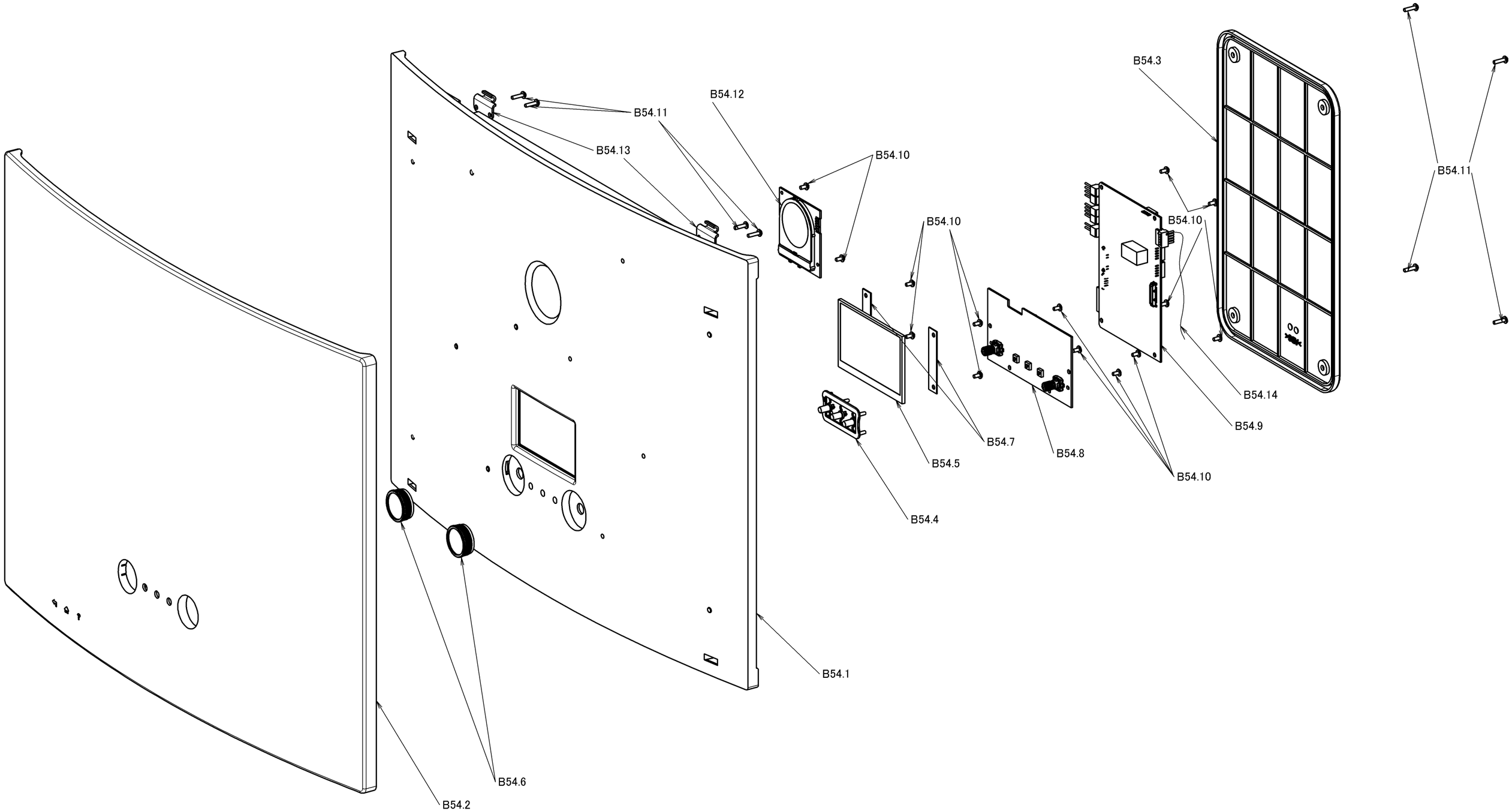
B54.3
B54.11
B54.12
B54.11
B54.13
B54.10
B54.10
B54.10
B54.14
B54.9
B54.7
B54.8
B54.5
B54.10
B54.4
B54.1
B54.6
B54.2

< EL. COMPO ASSY LARGE >

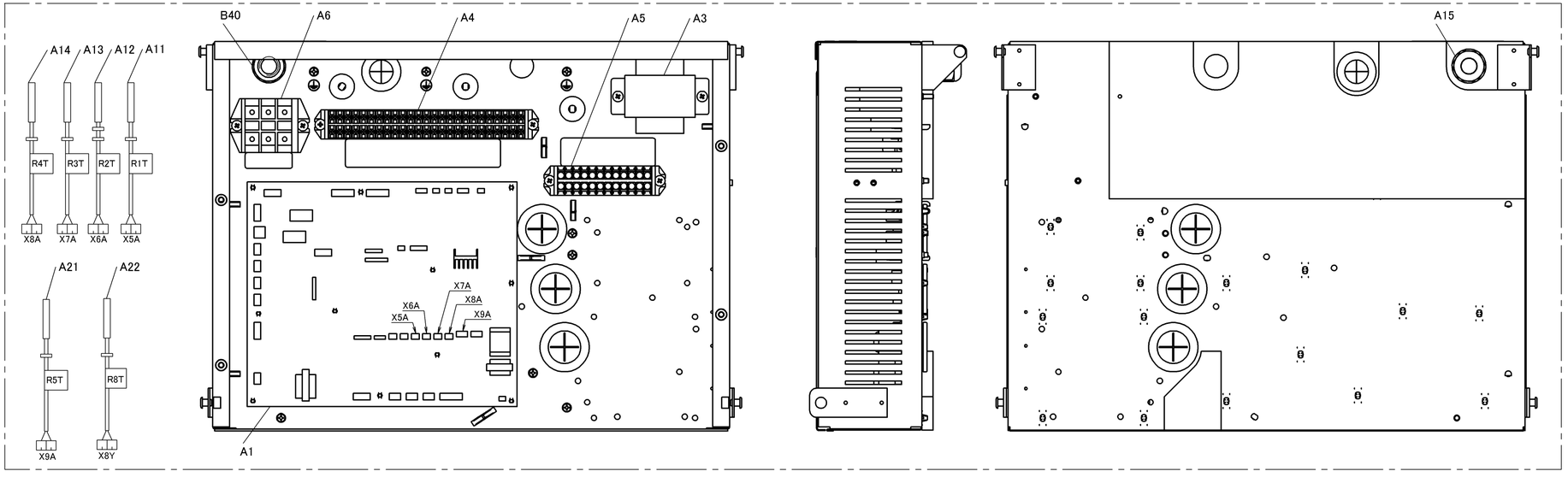

< WIRE HARNESS PUMP (SIGNAL) >

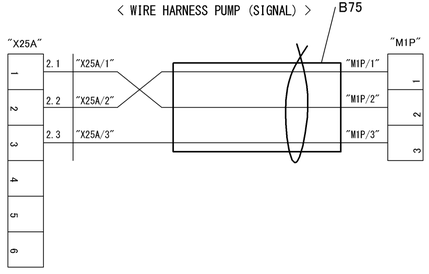

< WIRE HARNESS PUMP (POWER) >

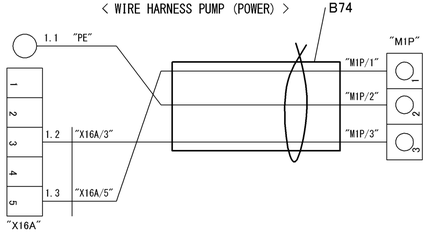
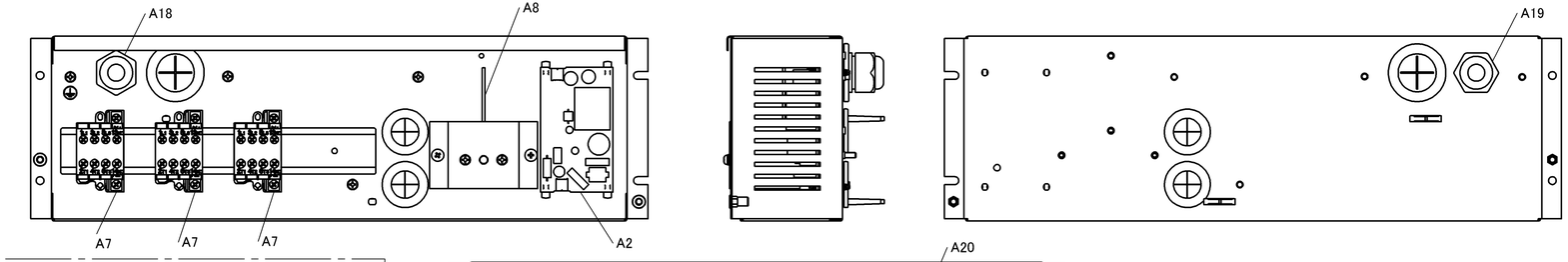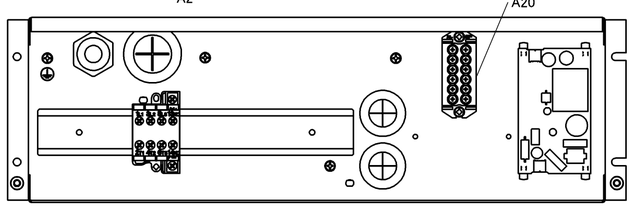
< EL. COMPO ASSY SMALL >