<EXPLODED VIEW UNIT>

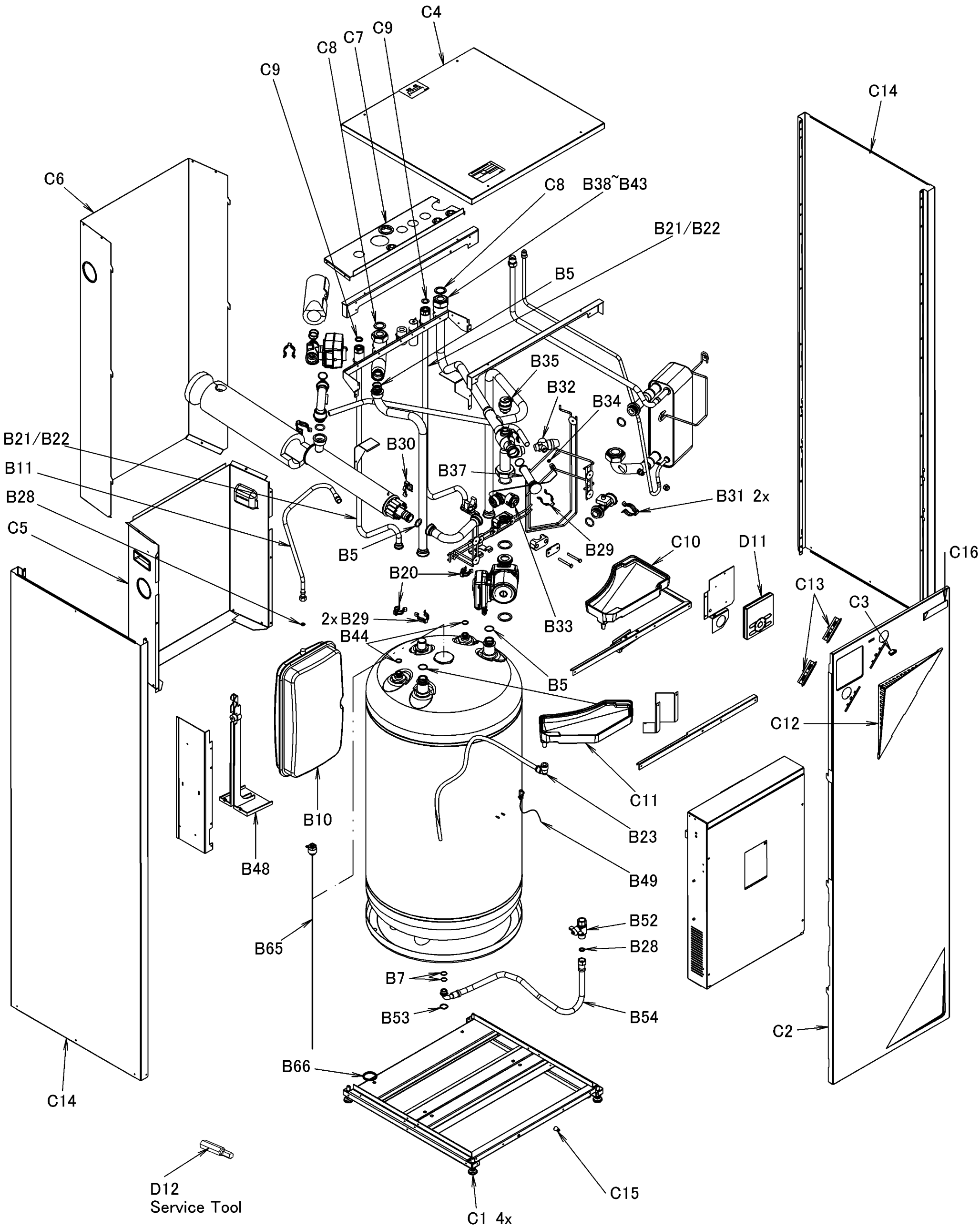

<HEAT EXCHANGER ASSY>

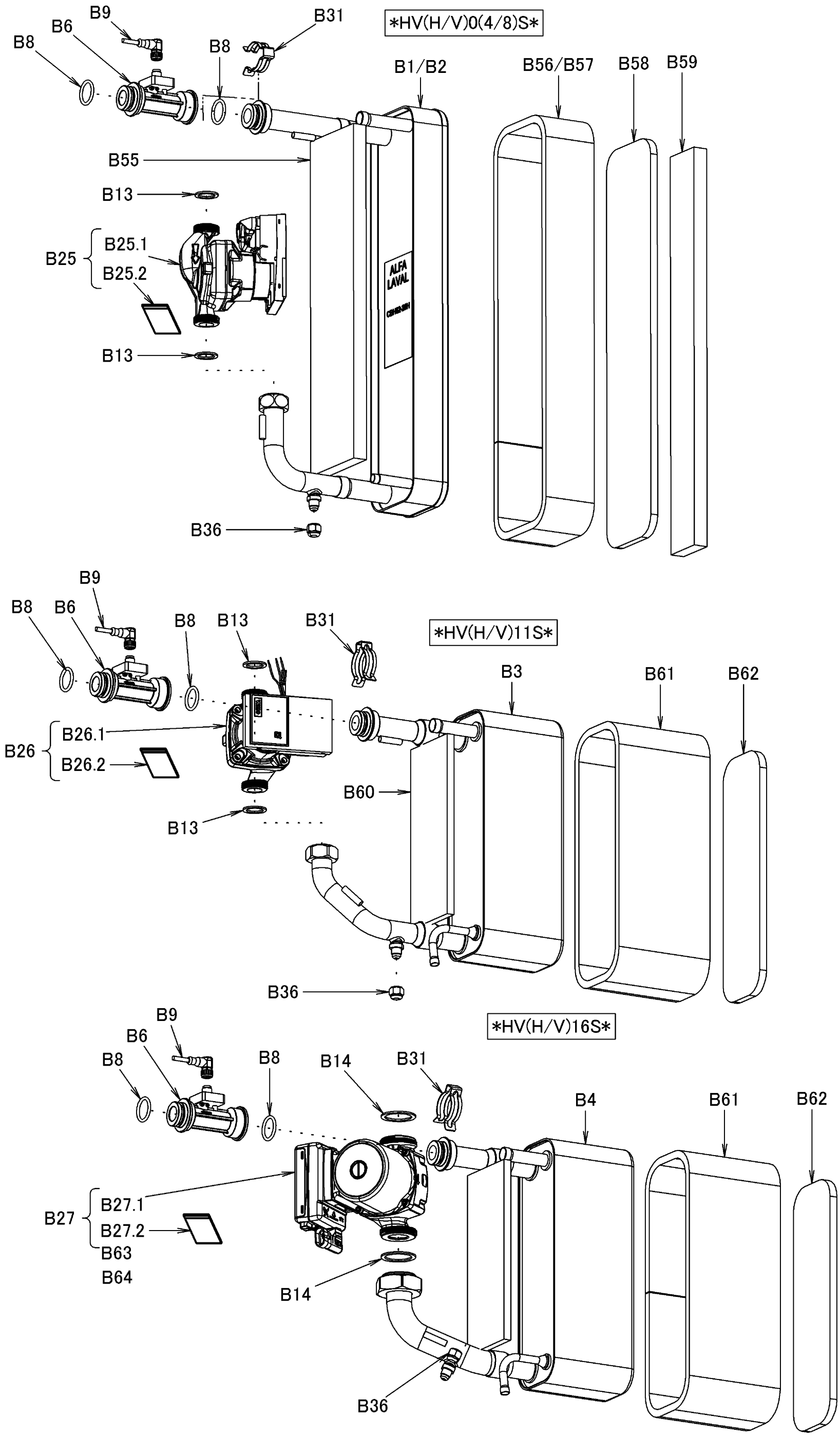

<SWITCHBOX>

Switchbox all models

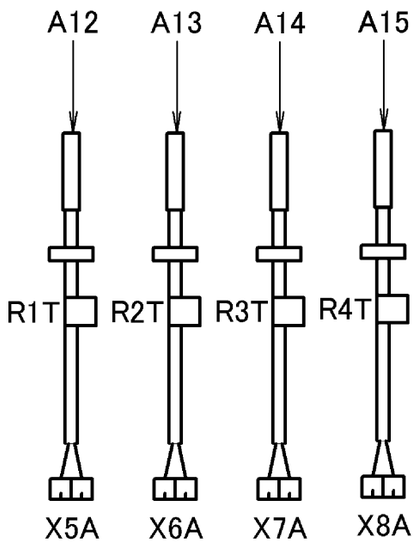

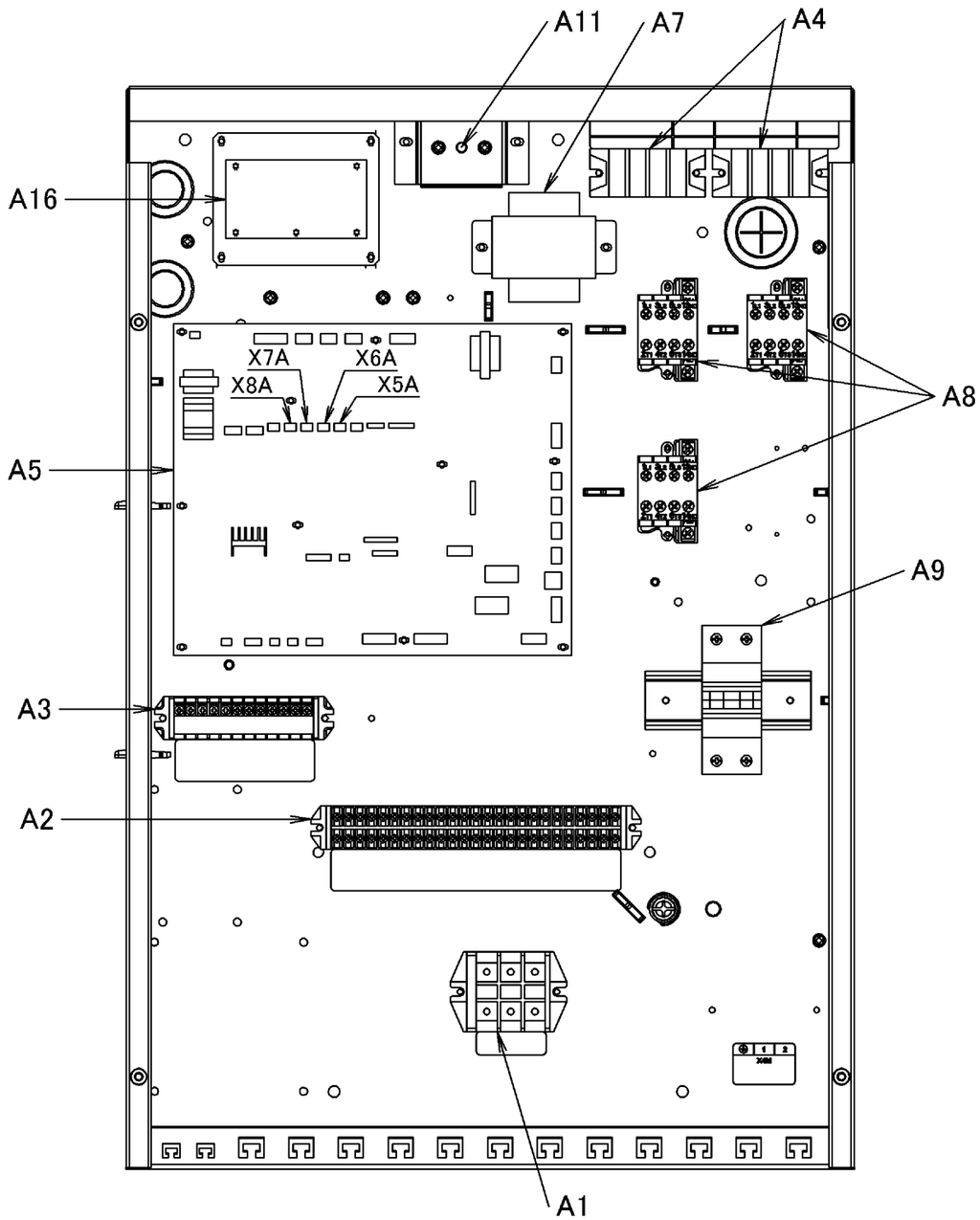

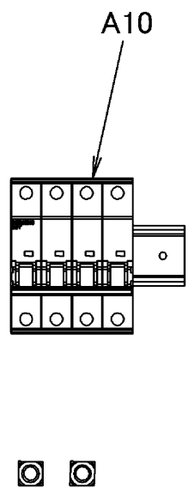

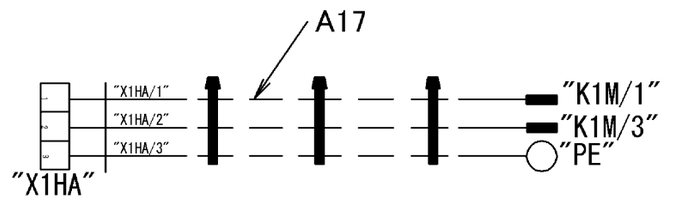

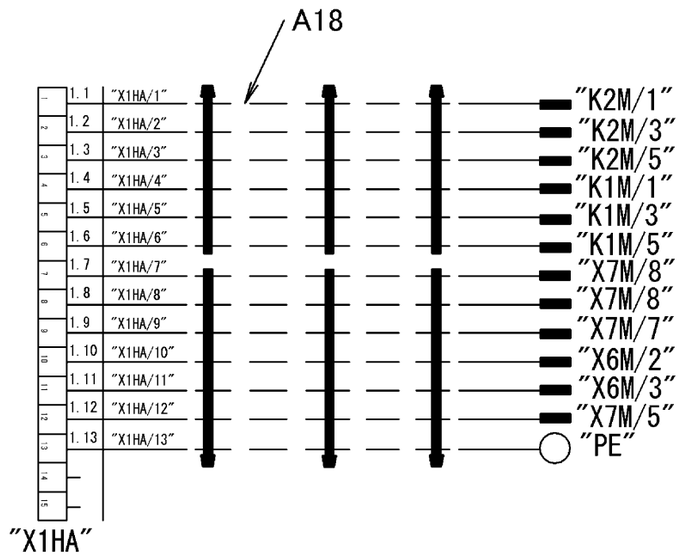

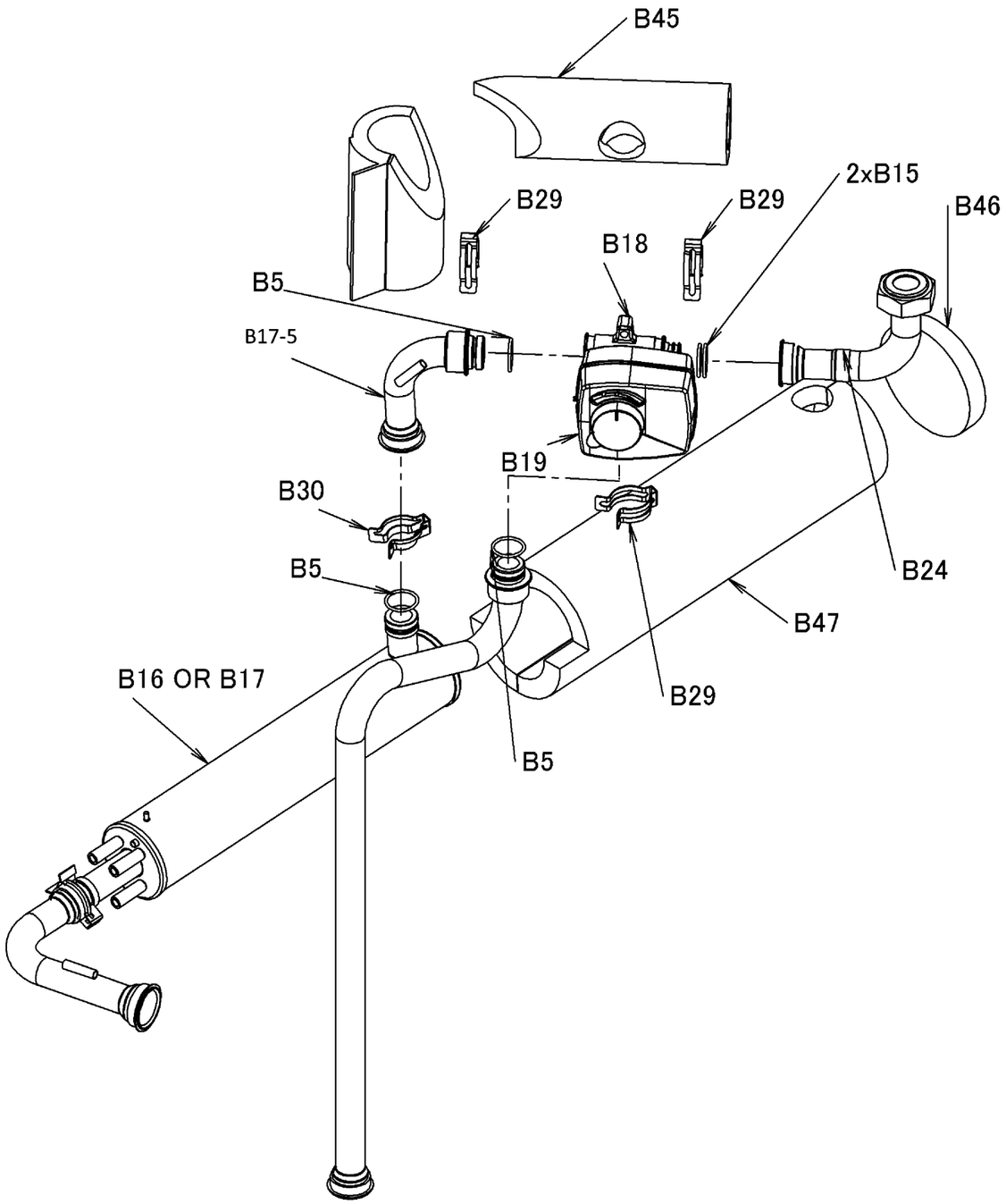
B45
B29
B29
2xB15
B46
B18
B5
B17-5
B19
B30
B5
B24
B47
B16 OR B17
B29
B5

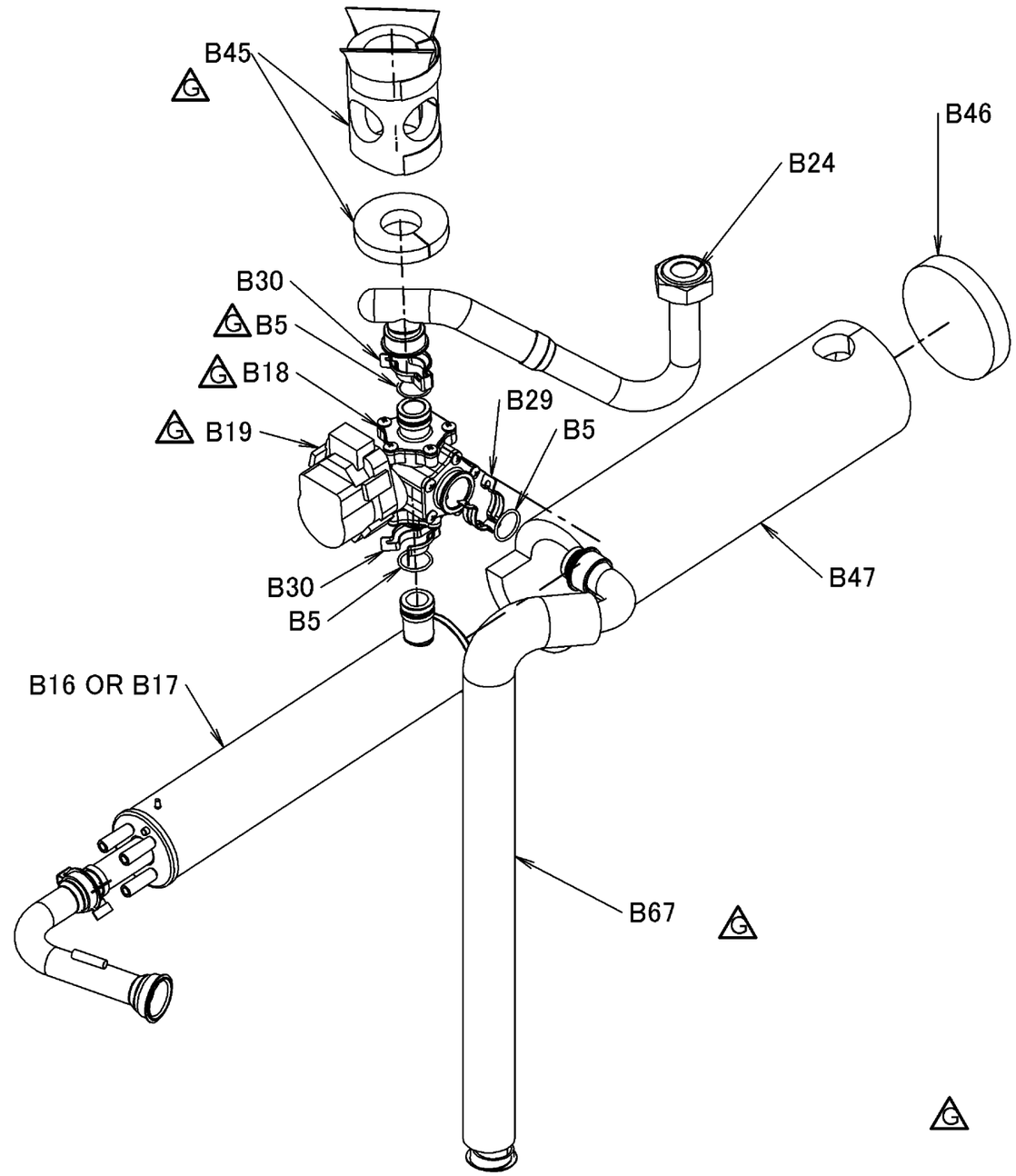
B45
B46
B24
B30
B5
B18
B29
B19
B5
B30
B5
B47
B16 OR B17
B67
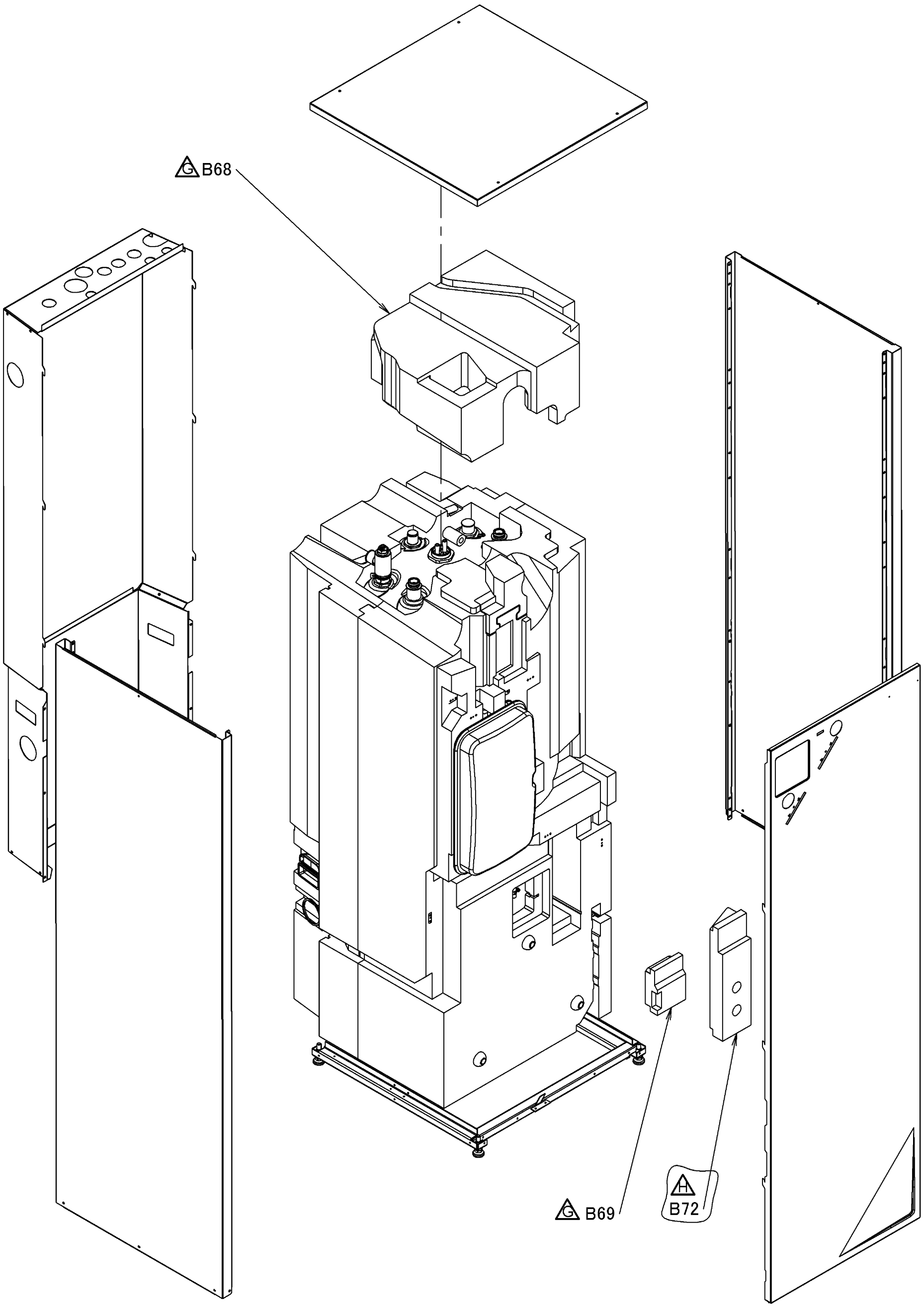
G <TANK INSULATION 260L>