<141573-01> <141574-01> <141577-01> <141578-01> <141581-01> <141582-01> <141585-01> <141586-01>
<EHSH04P30BB> <EHSHB04P30BB> <EHSX04P30BB> <EHSXB04P30BB> <EHSH08P30BB>
<EHSHB08P30BB> <EHSX08P30BB> <EHSXB08P30BB>

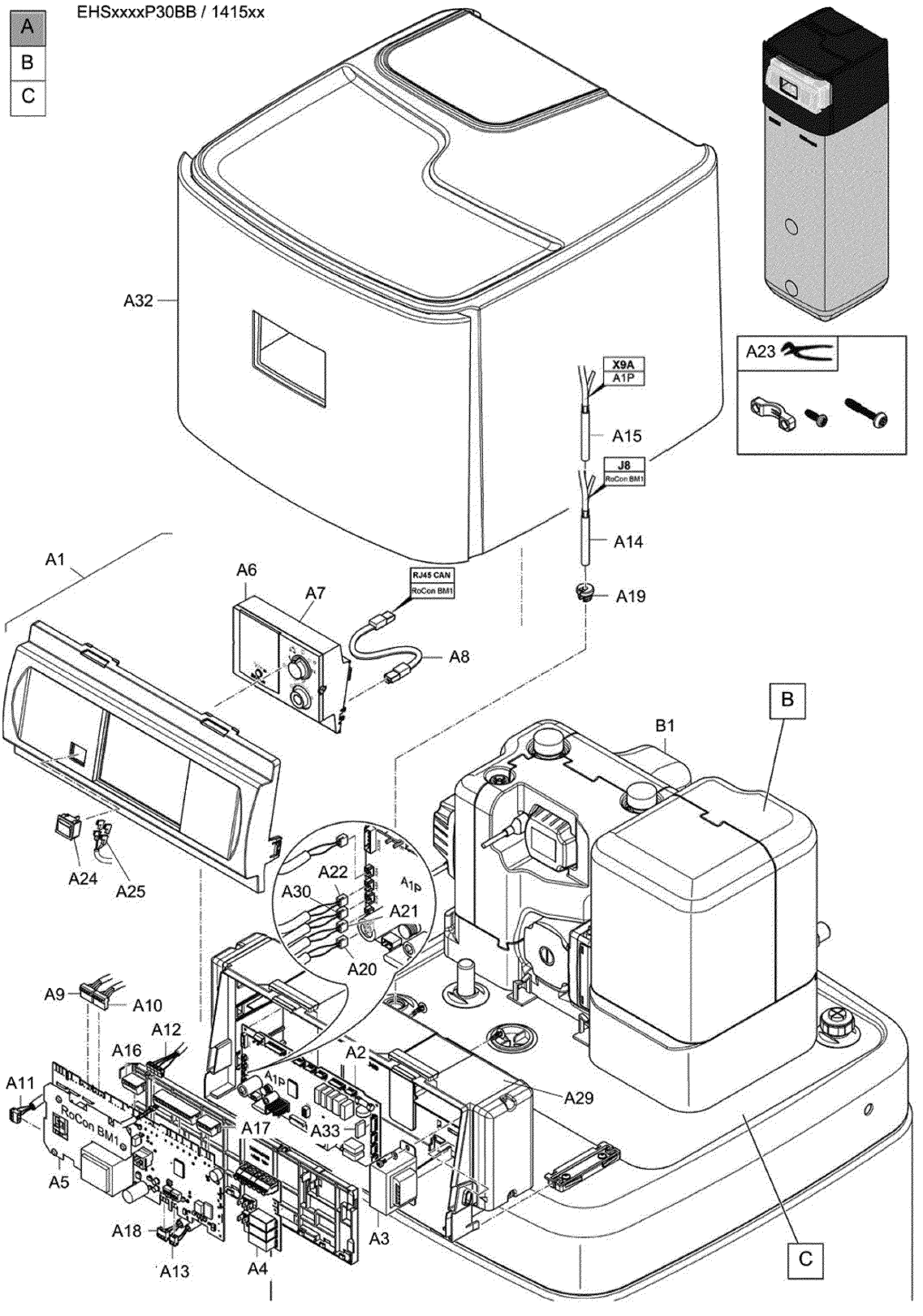

<141573-01> <141574-01> <141577-01> <141578-01> <141581-01> <141582-01> <141585-01> <141586-01>
<EHSH04P30BB> <EHSHB04P30BB> <EHSX04P30BB> <EHSXB04P30BB> <EHSH08P30BB>
<EHSHB08P30BB> <EHSX08P30BB> <EHSXB08P30BB>

HPSU compact

EHSxxxxP30BB / 1415xx

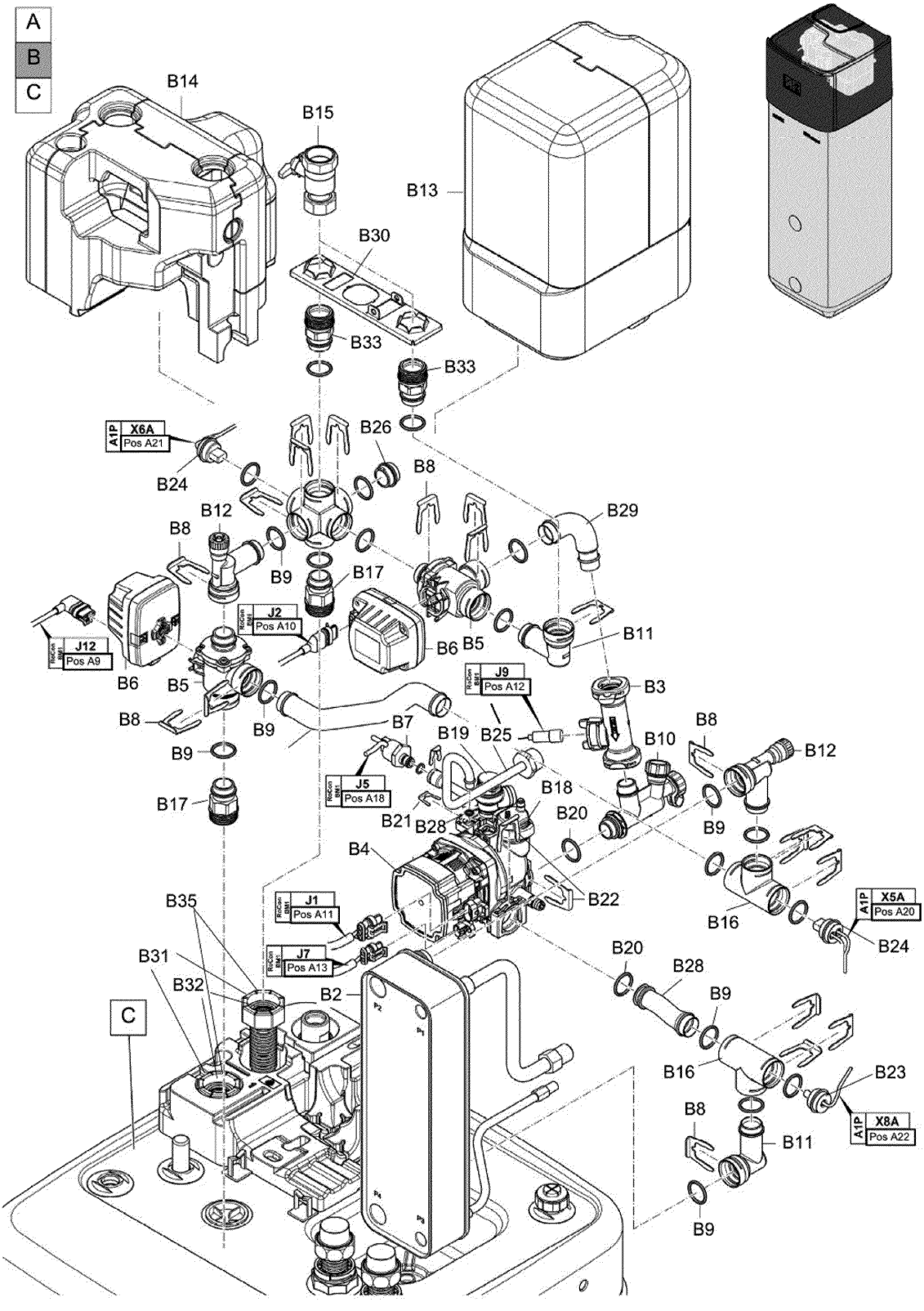

HPSU compact
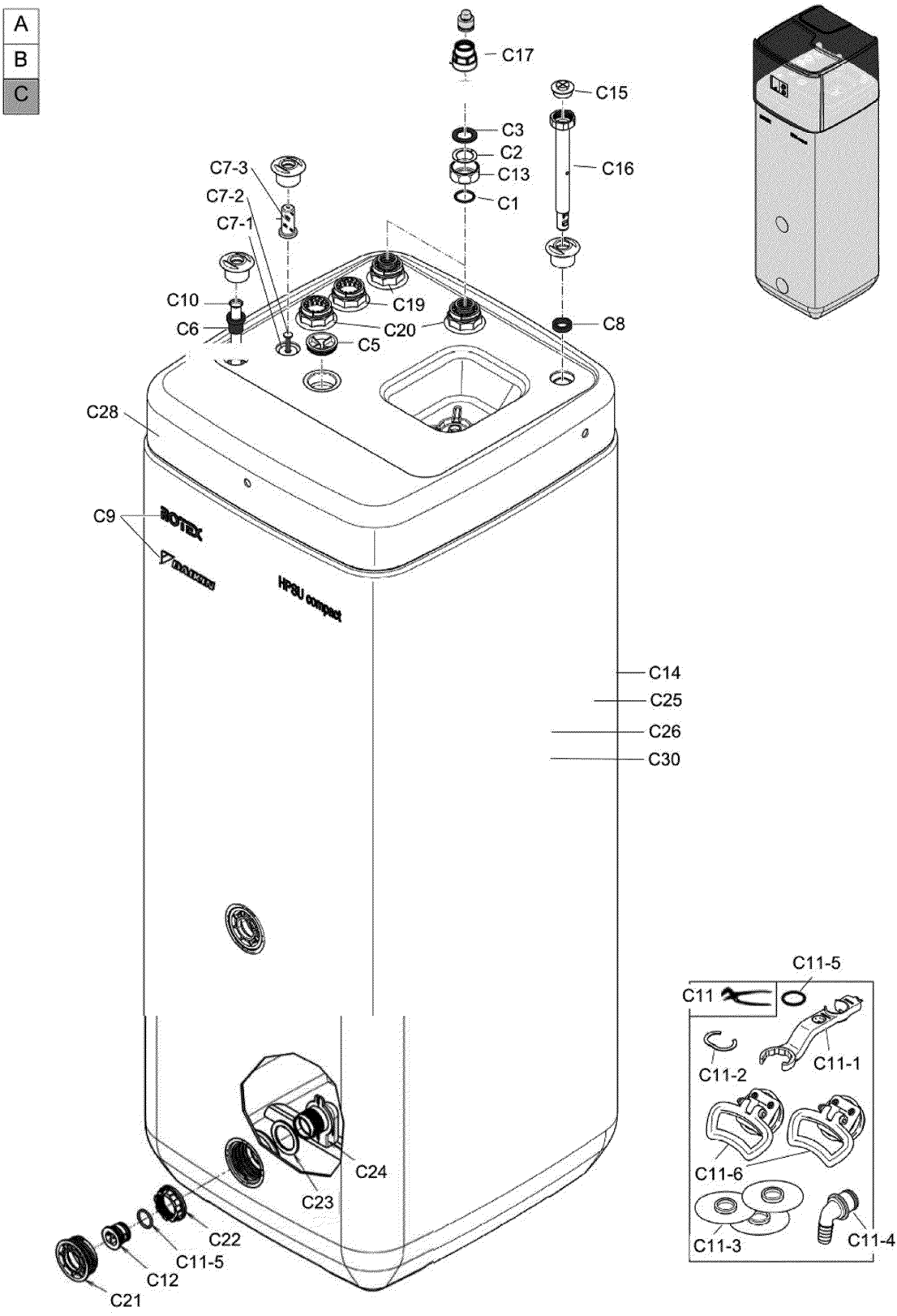
EHSxxxP30BA / 1415xx