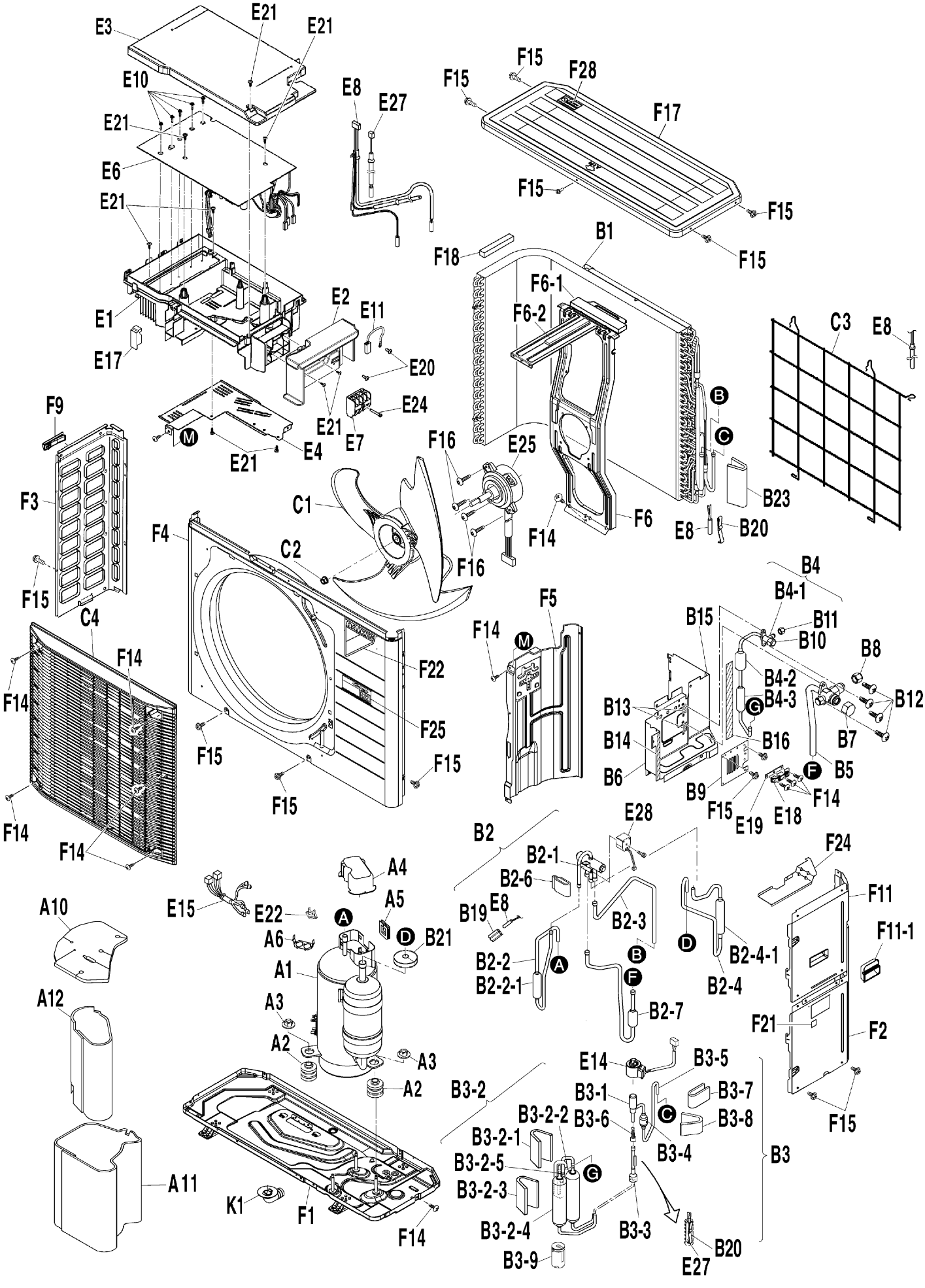RXM50XVMV / RXM60XVMV