RXZ335RCD / RXX335RCN / RXM335RC
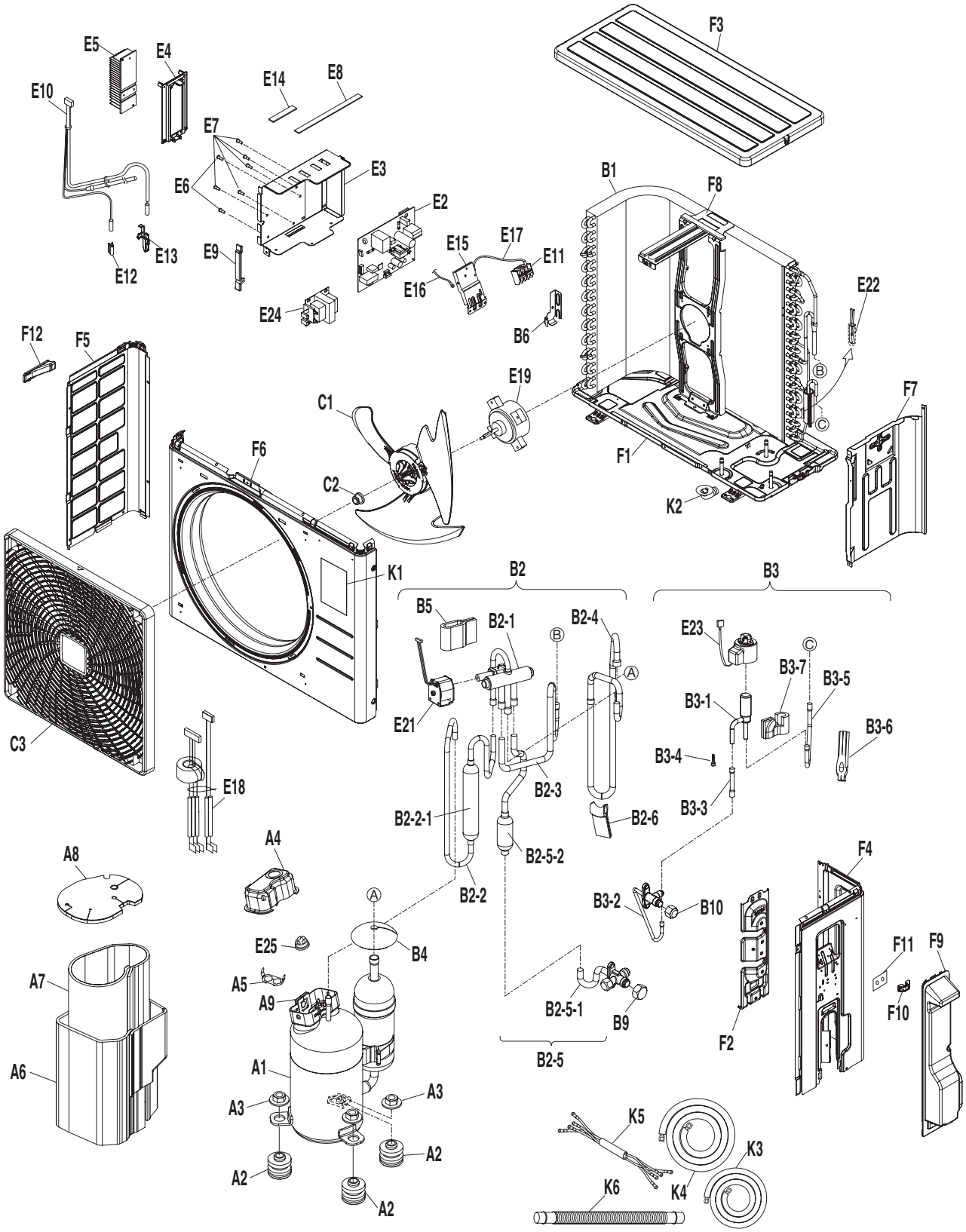
– TOP –