CUENOD

SPARE PARTS EXPLODED VIEW
GAS BURNERS
Model
CB-NC29-36 GX E 507/8A

R8220286-01 - 20/08/2018

EN	FR	IT	ES	DE	NL

Col	Reference	Model type	Begin	End
1	3836564	BB-NC29 GX E 507/8A	08-2018	-
2	3836565	BB-NC36 GX E 507/8A	07-2018	-
3	3836496	CH-G0432-T1/KN	03-2018	-
4	3836497	CH-G0432-T2/KL	03-2018	-
5	3832064	GT -D311 - 3/4 - RP1	06-2010	-
6	3832063	GT -D312 - 1 1/4 - RP1 1/4	12-2008	-
7	3833192	GT -D327 - 1 1/2-RP2	02-2011	-

1000

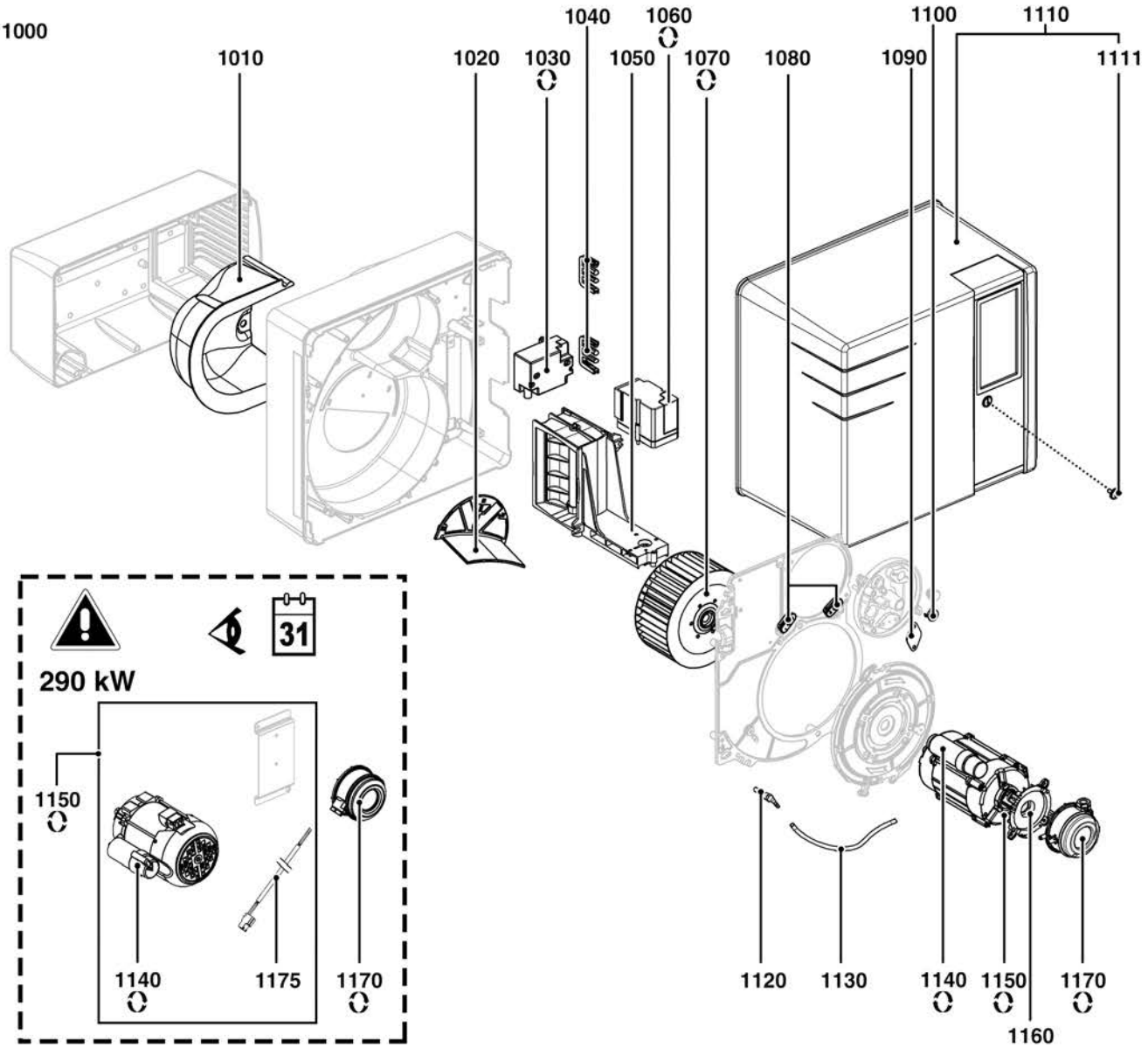

1500

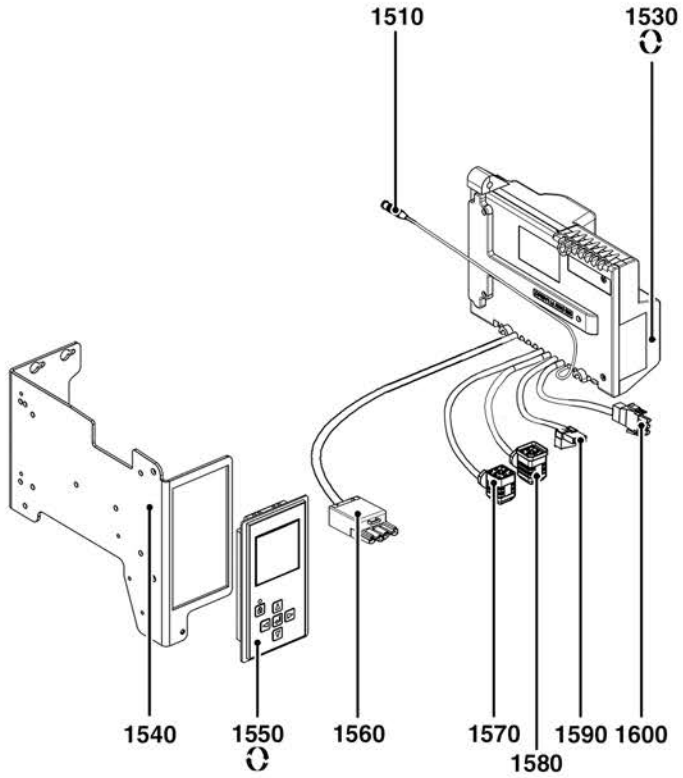

R8220004

	Description	Manf. Pt. N	Type	BB-NC29 GX E 507/8A	BB-NC36 GX E 507/8A	CH-G0432-T1/KN	CH-G0432-T2/KL	GT-d311 - 3/4" - Rp1"	GT-d312 - 1"1/4 - Rp1"1/4	GT-d327 - 1"1/2-Rp2"													31 From	to
				1	2	3	4	5	6	7	8	9	10	11	12	13	14	15	16	17	18			
1000	BURNER BODY																							
1010	SOUND INSULATION	65300518		●	●																			
1020	AIR RECYCLING	65300513		●																				
	AIR RECYCLING	65300525			●																			
1030	IGNITION TRANSFO. EBI 2X7,5 230V	13009663		●	●																			
1040	GROMMET/HOUSING	13016845		●	●																			
1050	AIR FLAP	65300514		●	●																			
1060	ACTUATOR STE 4,5 B0.37/6-R + CABLE L600	65300527		●	●																			
1070	FAN WHEEL D180X70 D12,7	13021143		●	●																			
1080	GROMMET/PLATE	65300517		●	●																			
1090	LOCKING PLATE	65300568		●	●																			
1100	INSPECTION GLASS BLU D14XD18	13007807		●	●																			
1110	COVER NC29/36 + MOUNTING SCREW	65300601		●	●																			
1111	FLAT HEAD SCREW M5X15	65300519		●	●																			
1120	PRESSURE TAP	65300567		●	●																			
1130	HOSE D4/7 L500 SILICONE	13015497		●	●																			
1140	CAPACITOR 10µF 2P 3mm	13012984			●																			
	CAPACITOR 8µF 2P 3mm	65300577		●																				
1150	MOTOR 0,25KW 230V D12,7 VENTILATED	65327150		●																				
	MOTOR 0,3KW 230V D12,7	65300528			●																			
1160	AIR PRESSURE SWITCH BASE D32	13020723			●																			
1170	AIR PRESS.SWITCH 604.91 0,5-5MB	65300020		●																				
	AIR PRESS.SWITCH 604.91 0,5-5MB+RAST	13020502			●																			
1175	CABLE AIR PRES.SWITCH+RAST2P MARK10 L710	65327175		●																				
1500	ELECTRIC PART																							
1510	IONISATION CABLE MC4/RAST 1P L350	65300158		●	●																			
1530	CONTROL UNIT TCG 511.00	65301021		●	●																			
1540	CONTROL UNIT BRACKET+DISPLAY	65300524		●	●																			
1550	DISPLAY/CONTROL UNIT TCG-TCH REL.2.2	65301109		●	●																			
1560	CABLE+PLUG WIE. 4P/RAST3P L250	65300531		●	●																			
1570	CABLE GAS VALVE+PLUG DIN/RAST5P L1500	65300570		●	●																			
1580	CABLE GAS P.SWITCH+PLUG DIN/RAST2P L1500	13023698		●	●																			
1590	CABLE IGNIT.TRANSFO+PLUG 2P/RAST2P L350	65300619		●	●																			
1600	CABLE MOTOR+PLUG 3P/RAST3P L300	13010519		●	●																			

2000

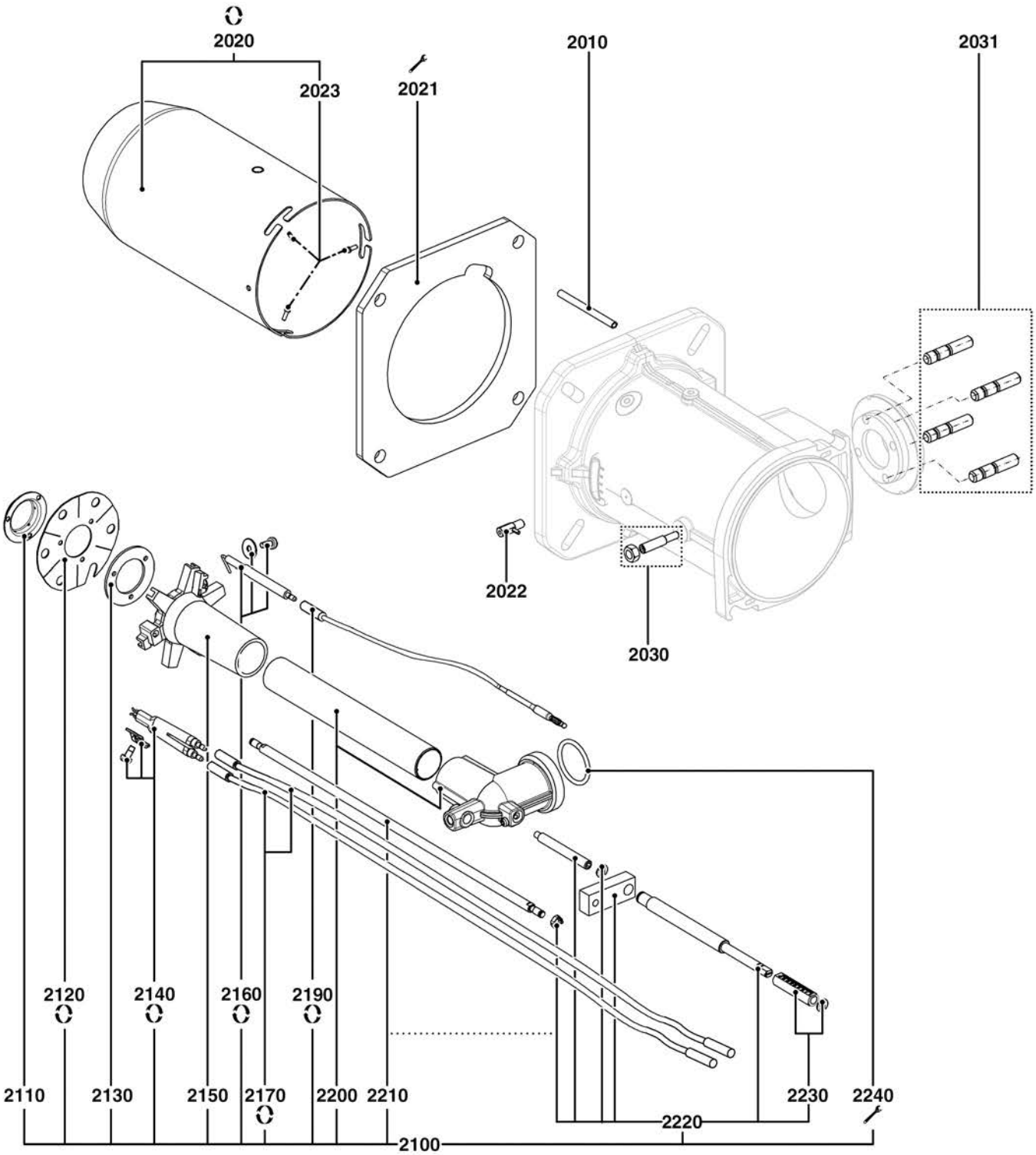

R8220005

	Description	Manf. Pt. N	Type	BB-NC29 GX E 507/8A	BB-NC36 GX E 507/8A	CH-G0432-T1/KN	CH-G0432-T2/KL	GT-d311 - 3/4" - Rp1"	GT-d312 - 1"1/4 - Rp1"1/4	GT-d327 - 1"1/2-Rp2"															31	
				1	2	3	4	5	6	7	8	9	10	11	12	13	14	15	16	17	18				From	to
2000	COMBUSTION HEAD																									
2010	FURNACE PRESSURE TUBE LG.200MM	65301184				●																				
	FURNACE PRESSURE TUBE LG.350MM	65301185					●																			
2020	FLAME TUBE D130/105/90 L245	65300545				●																				
	FLAME TUBE D130/105/90 L385	65300546					●																			
2021	GASKET/BURNER FLANGE 205X195X8 D139	13018590				●	●																			
2022	FLAME TUBE ROTATION LEVER	13007802				●	●																			
2023	SCREWS M6 FIX FLAME TUBE (3 PIECES)	13007804				●	●																			
2030	SCREW+NUT M8X40	65300557				●	●																			
2031	KIT HEXAGONAL NUT+SCREWS M10X40	13016814				●	●																			
2100	COMB.HEAD GAS L360 D89/93 CPL.	65300543				●																				
	COMB.HEAD GAS L500 D89/93 CPL.	65300544					●																			
2110	GAS NOZZLE D47/33X9 6 DRILLING D2	13022110				●	●																			
2120	BAFFLE PLATE D89/30 6SL DOUBLE ELECTRODE	65300547				●	●																			
2130	PROPANE DIFFUSER	13018630				●	●																			
2140	ELECTRODE BLOCK 12X46 D4 D1,2X10	65300738				●	●																			
2150	GAS HEAD L101 D93/30 6 BRANCH.	65300346				●	●																			
2160	IONISATION PROBE D8X80 D4 D2X27 80° F+S	13010529				●	●																			
2170	IGNITION CABLE D4/D4 L660	13015229				●																				
	IGNITION CABLE D4/D4 L850 CARBON	13020808					●																			
2190	IONISATION CABLE MC4/D4 L650	13015121				●																				
	IONISATION CABLE MC4/D4 L850	13020809					●																			
2200	GAS INLET TUBE KN/T1+ELBOW	65300548				●																				
	GAS INLET TUBE+ELBOW	65300549					●																			
2210	ADJUST ROD D6/8/6 L360+CLIPS D6	65300550				●																				
	ADJUST ROD D6/8/6 L500+CLIPS D6	65300551					●																			
2220	ADJUST ROD D8/12/10 L172+SPACER 37MM	65300556				●	●																			
2230	ADJUST SCALE+CIRCLIPS	65300554				●	●																			
2240	O-RING 4137 D34,52X3,53 NBR	13022908				●	●																			

3000

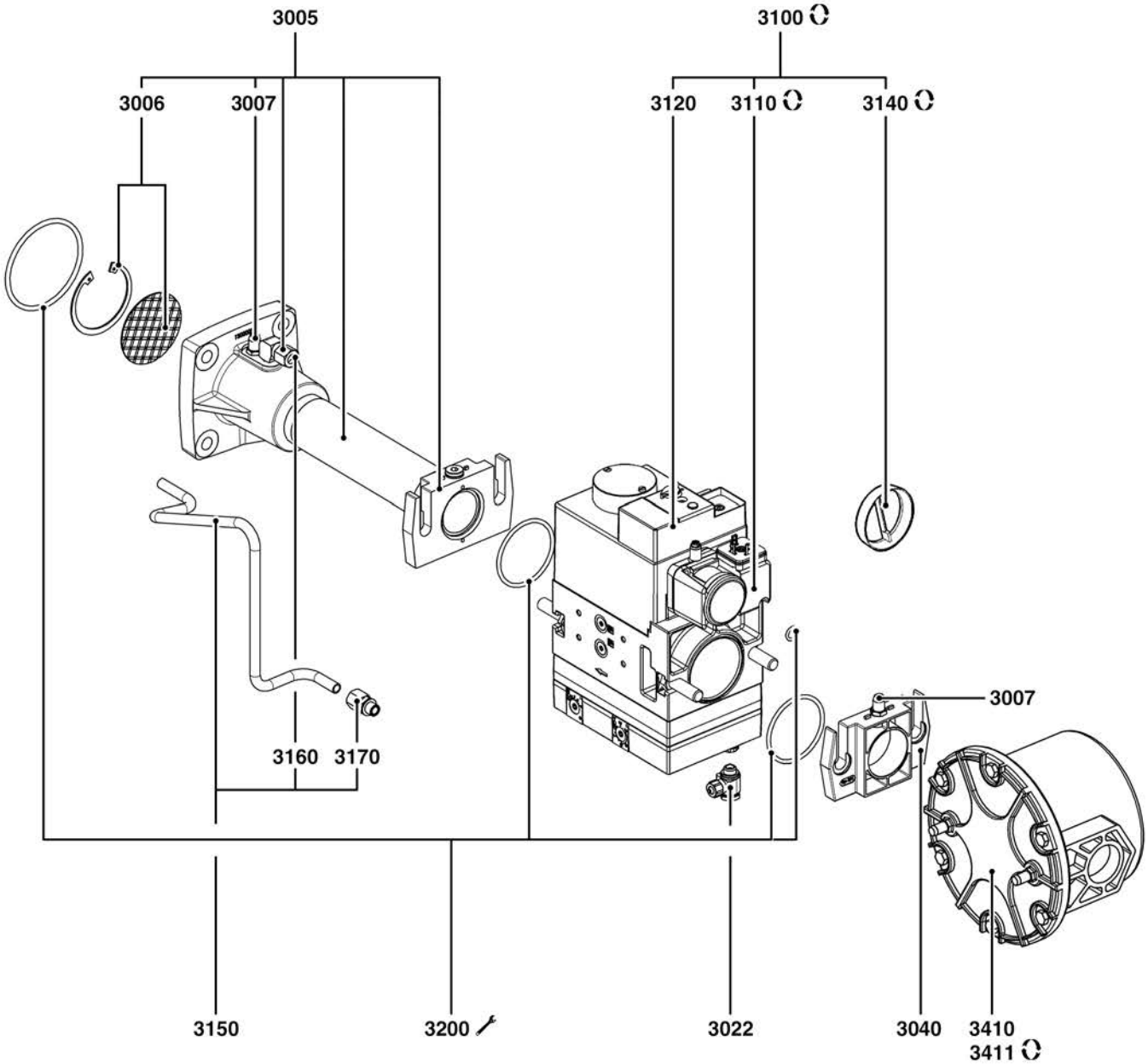
3005
3100
3006
3007
3120
3110
3140
3007
3160
3170
3150
3200
3022
3040
3410
3411

	Description	Manf. Pt. N	Type	BB-NC29 GX E 507/8A	BB-NC36 GX E 507/8A	CH-G0432-T1/KN	CH-G0432-T2/KL	GT-d311 - 3/4" - Rp1"	GT-d312 - 1"1/4 - Rp1"1/4	GT-d327 - 1"1/2-Rp2"													31 From	to
				1	2	3	4	5	6	7	8	9	10	11	12	13	14	15	16	17	18			
3000	GAS TRAIN																							
3005	COLLECTOR CPL. RP 1''1/4	13014012							●															
	COLLECTOR CPL. RP2	13011796								●														
	COLLECTOR CPL. RP3/4	13014011						●																
3006	STABILISER + CIRCLIP D60	13011367						●	●	●														
3007	PRESSURE TAP R1/8	13009722						●	●	●														
3022	BANJO UNION LCK-G1/8-PK4	13020682						●	●	●														
3040	FLANGE MB405/407 RP3/4 +O-RING	13010074						●																
	FLANGE MB412 RP1 1/4	13022858							●															
	FLANGE MB420 RP2 + PRES.PLUG	13007859								●														
3100	GAS VALVE MB-VEF407 B01 S30 RP3/4 PL=1,2	13011113						●																
	GAS VALVE MB-VEF412 B01 S10 RP1 1/4	13010082							●															
	GAS VALVE MBVEF420 B01 S10 RP2''+FP	13011725								●														
3110	GAS PRESS.SWITCH GW 150 A5 5-150MB	13010078						●	●	●														
3120	COIL DUN N° 1105 MBVEF407	13010083						●																
	COIL DUN N° 1205 MBVEF412	13010084							●															
	DUN COIL No. 1215 MBVEF420	13011726								●														
3140	STRAINER D20 /MB..405/407	65326948						●															01/17	
	STRAINER D30 / MB..410/412	65327438							●														06/18	
	STRAINER GRID MB..420	13007901								●														
	STRAINER MB..405-407	13016011						●																12/16
	STRAINER MB..410-412	13016012							●															05/18
3150	GAS PRESSURE TUBE MBVEF407+UNION	13022464						●																
	GAS PRESSURE TUBE MBVEF412+UNION	65300649							●															
	GAS PRESSURE TUBE MBVEF420+UNION	65300669								●														
3160	ANGLED UNION	13023188						●	●	●														
3170	UNION G1/8 + GASKET	13023187						●	●	●														
3200	O-RING KIT D70X3+D36X3 (2)+D11X2/MB..407	65300575						●																
	O-RING KIT D70X3+D50X3 (2)+D11X2/MB..412	65300576							●															
	O-RING KIT D70X3+D86X3 (2)D11X2/MB..420	65300671								●														
3410	EXTERNAL GAS FILTER RP2	13009700								●														
	GAS FILTER ANELLO RP 1	13010092						●	●															
3411	STRAINER GF 510-515+O-RING	13010093						●	●															
	STRAINER GF 520+O-RING	13010044								●														

[illegible]ES

[illegible]

[illegible]IZZATE

[illegible] /
[illegible]

[illegible]
[illegible]

[illegible] /
[illegible] /
[illegible]

[illegible]

[illegible]

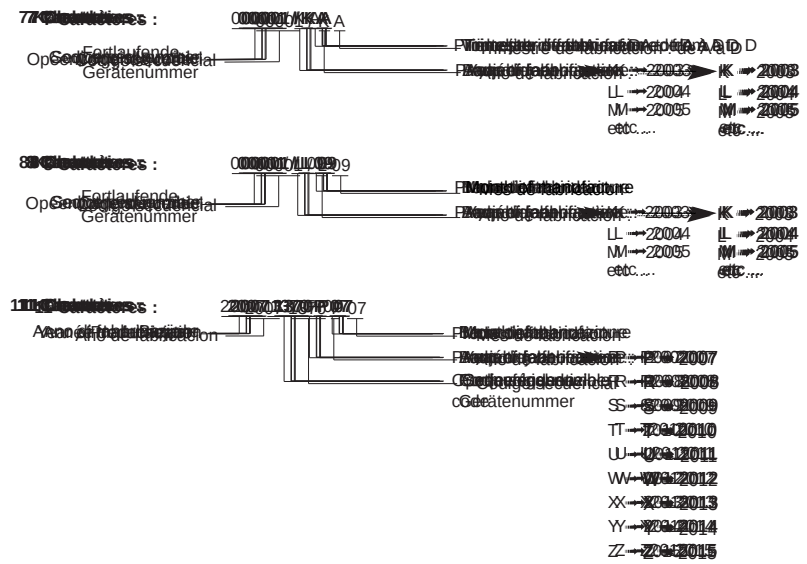

[illegible] guidance [illegible] de [illegible] produits.