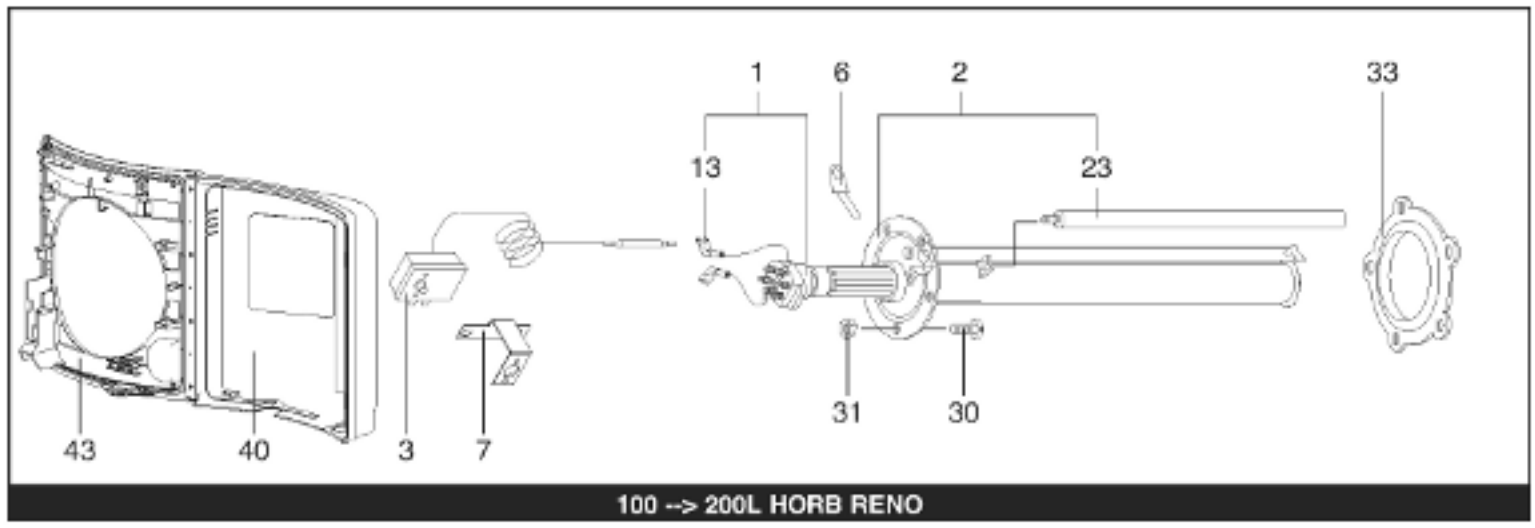


100 --> 200L HORB RENO

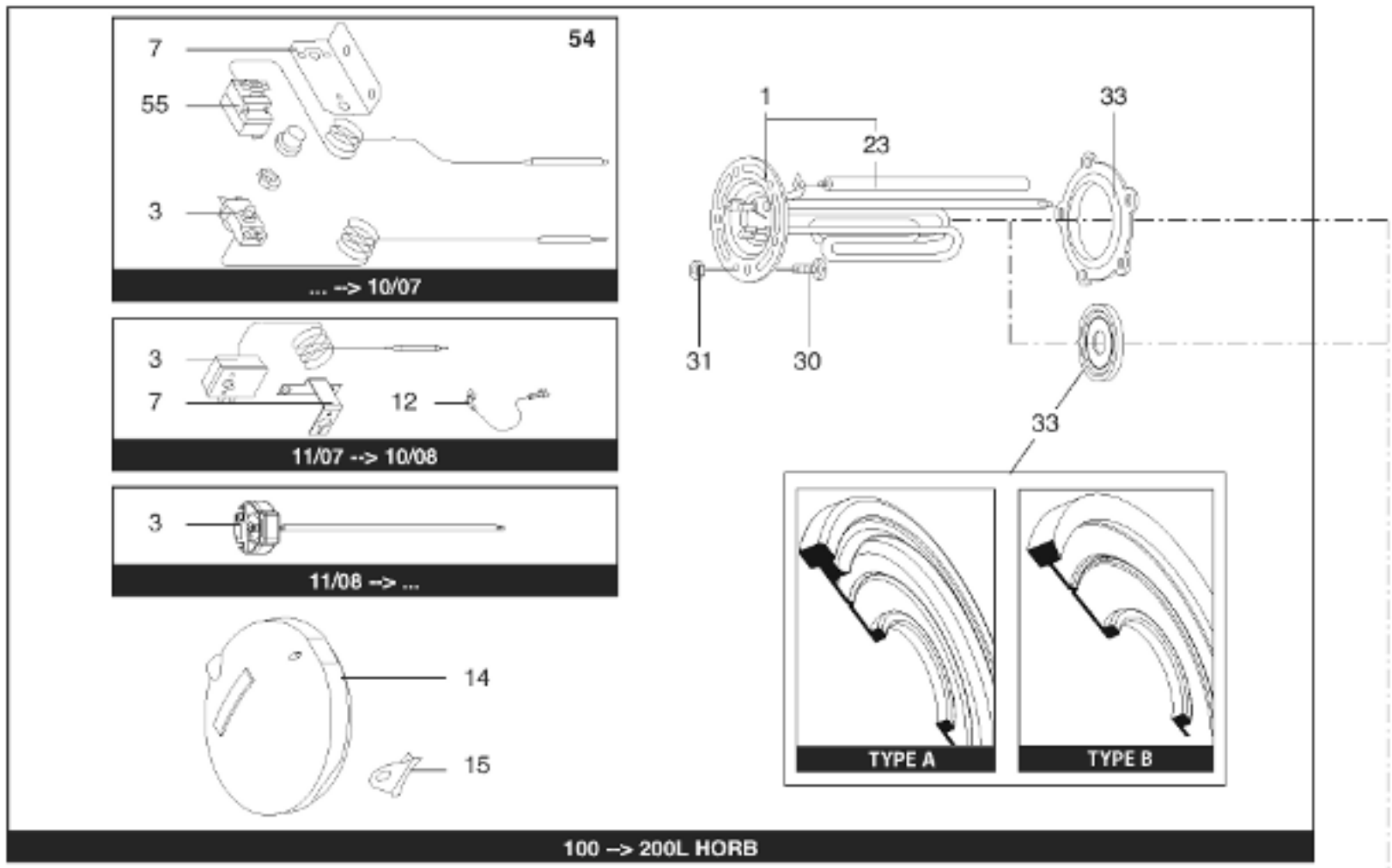


100 --> 200L HORB

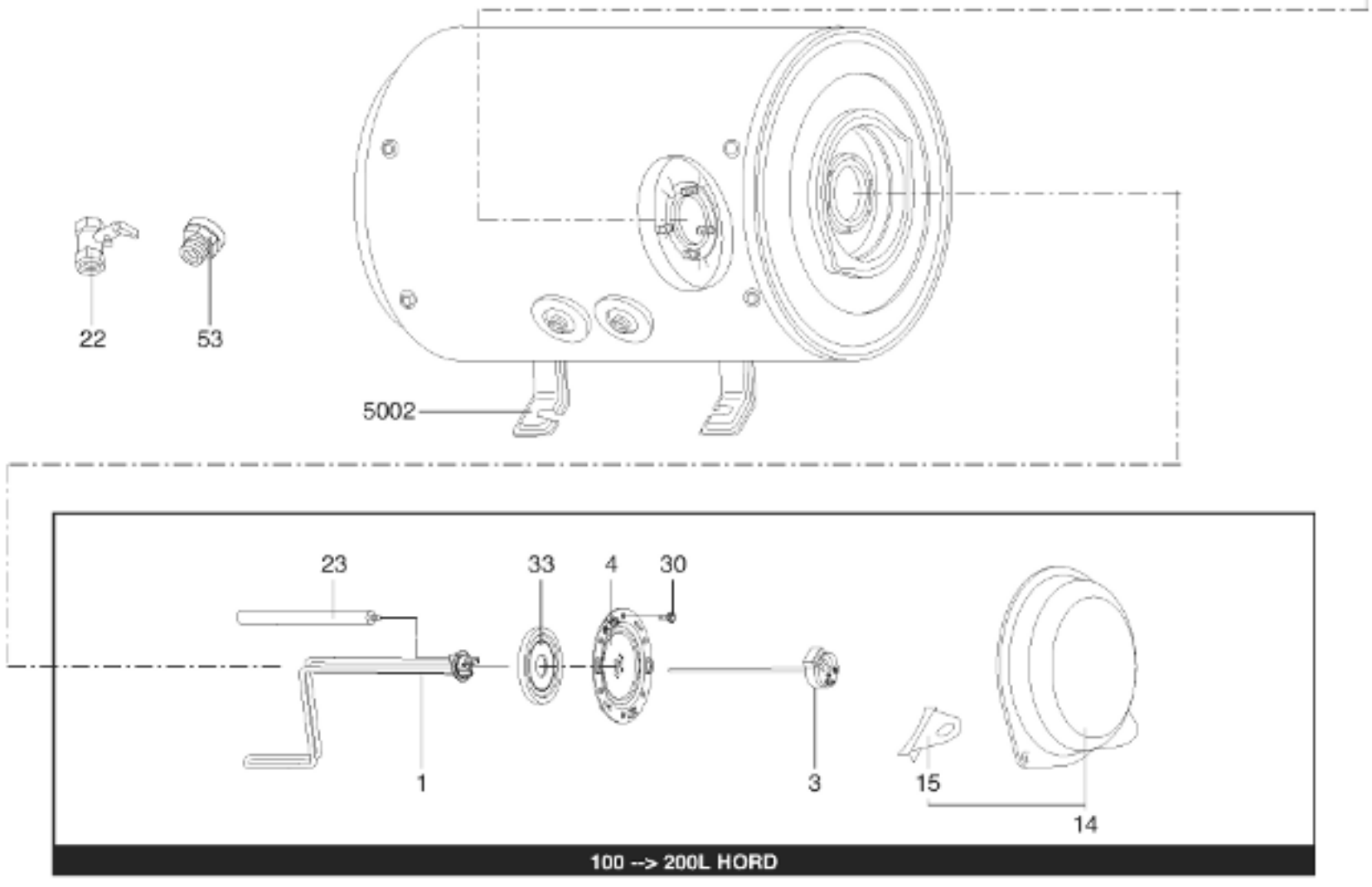


100 --> 200L HORD

R8208252