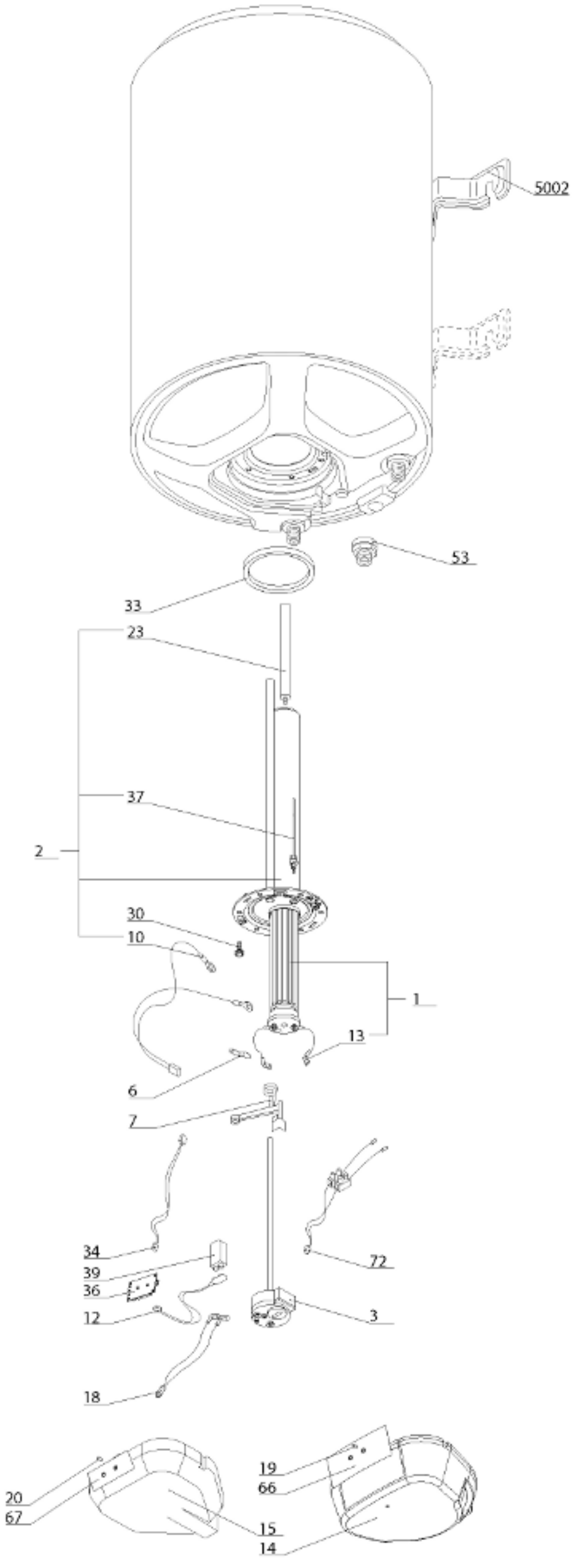

R8208856