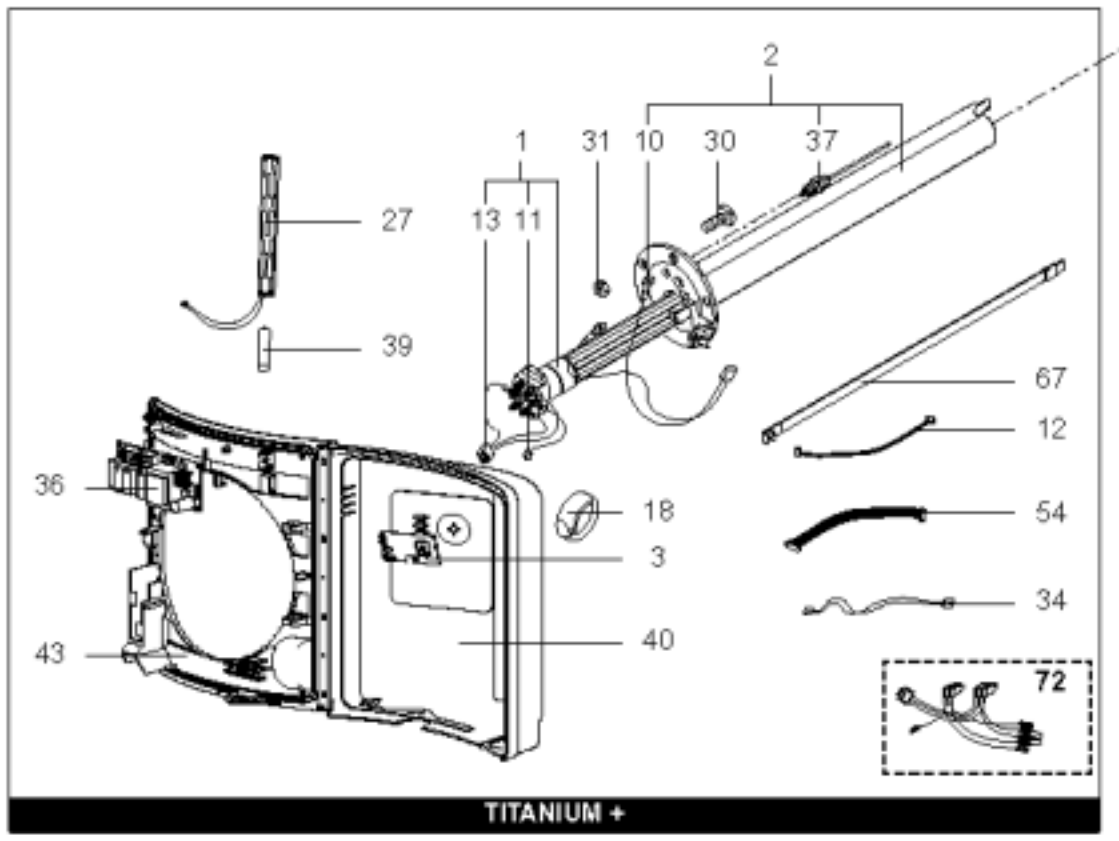

TITANIUM +

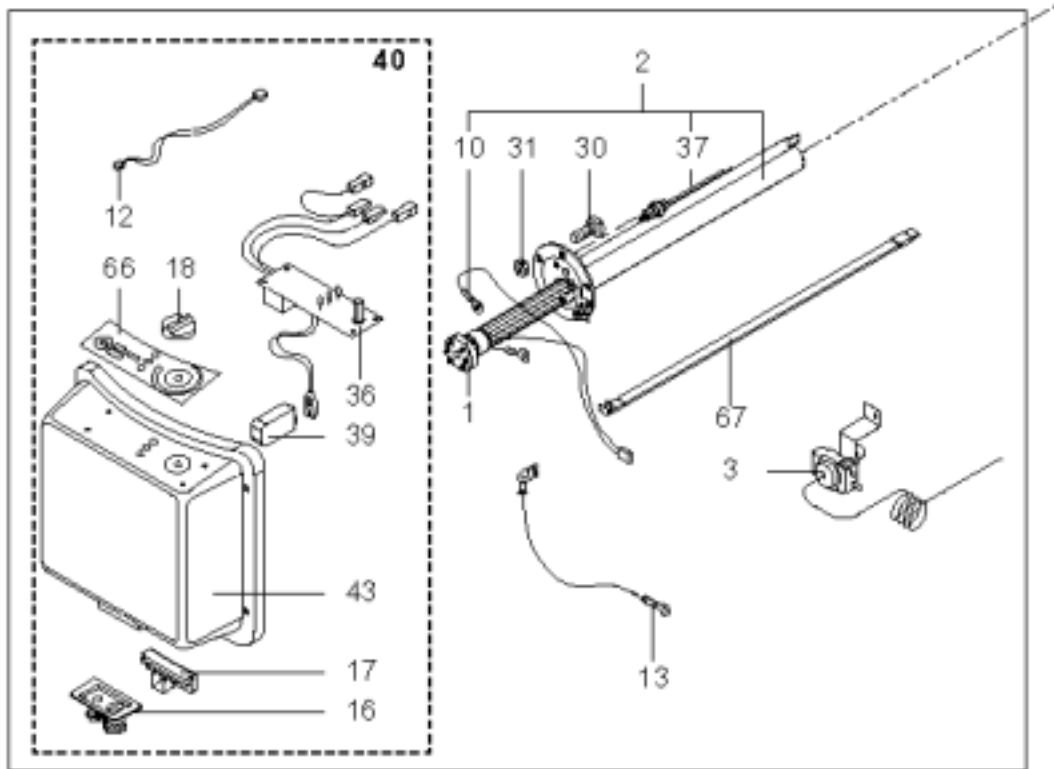
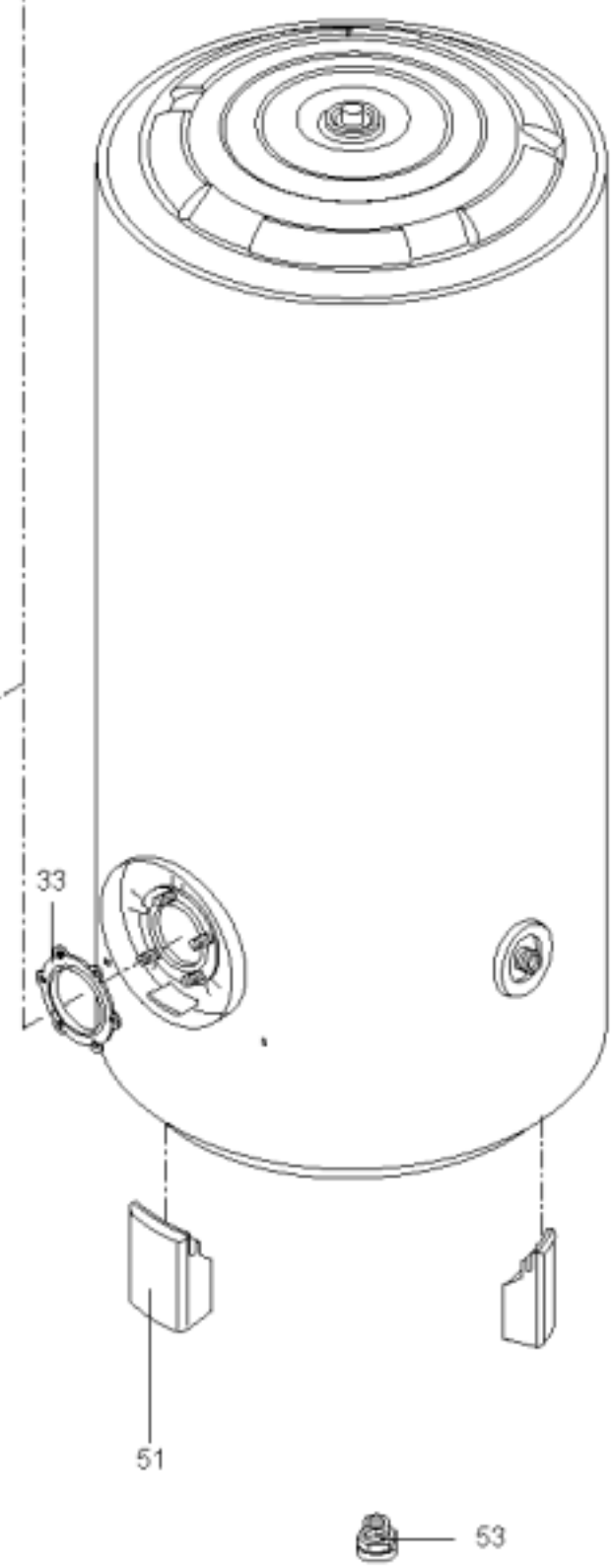
PROTECH 2