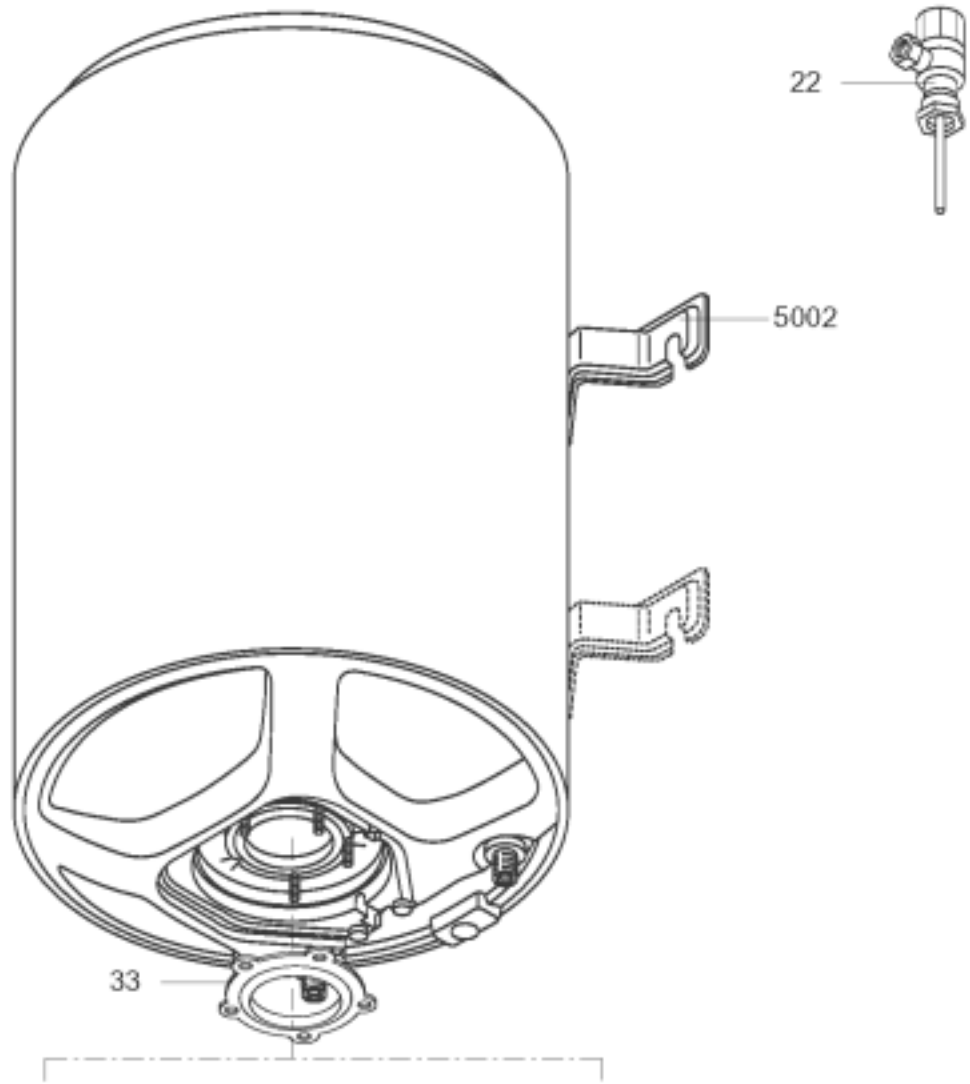

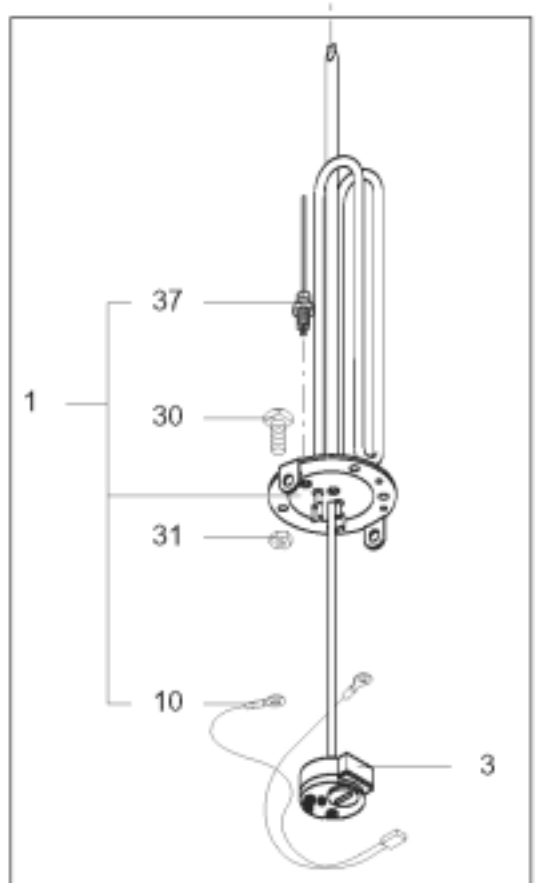

... --> 05/10

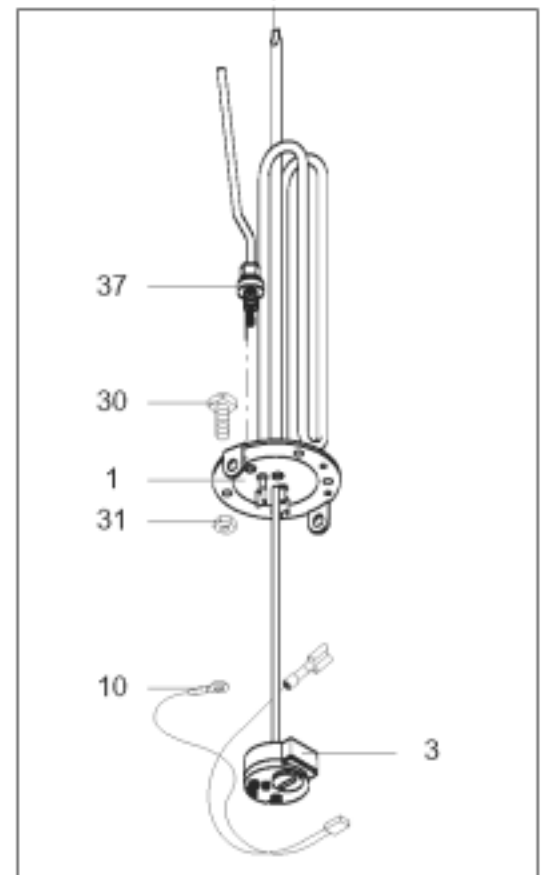

06/10 --> ...

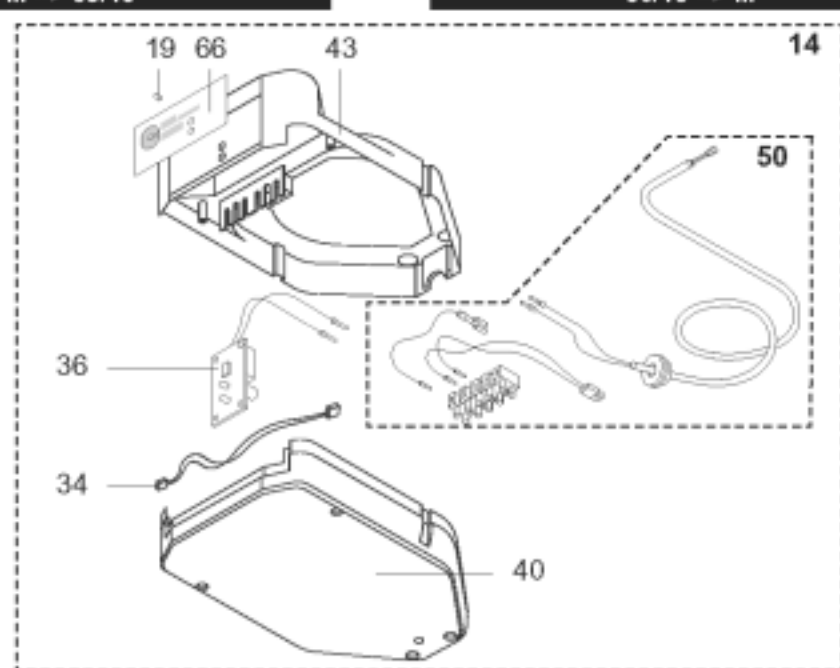

R8208377