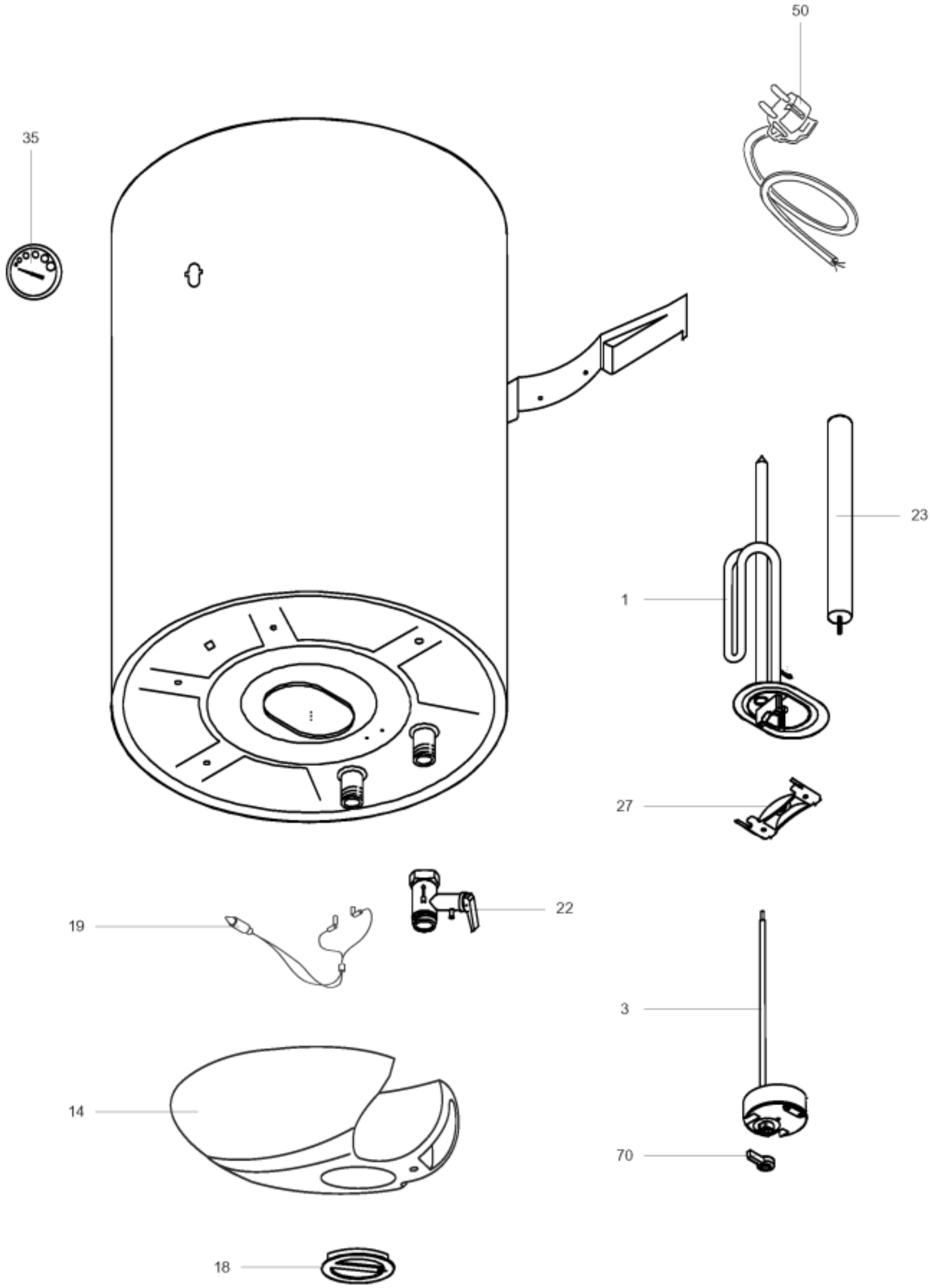


R8223085