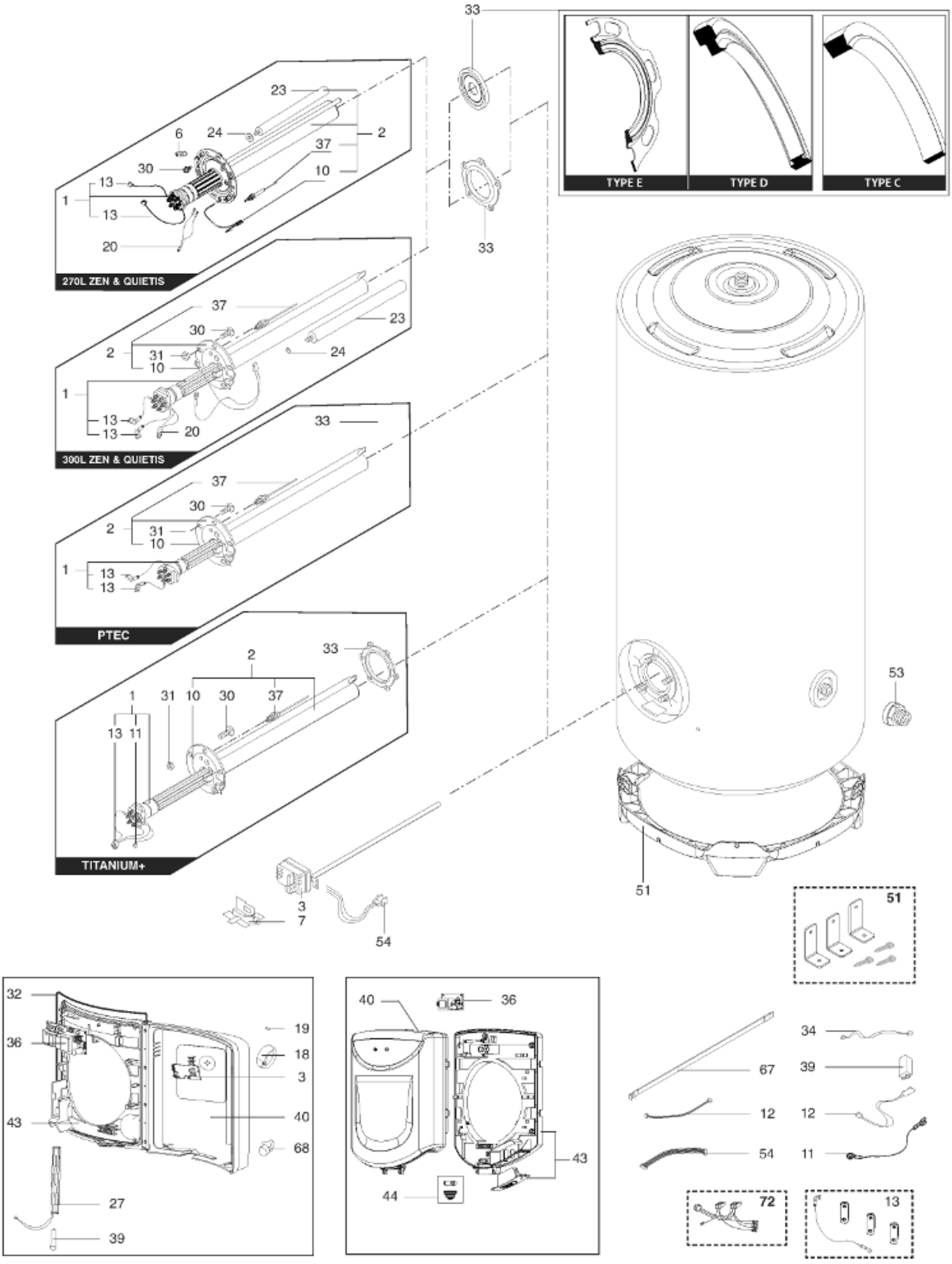
33
TYPE E
TYPE D
TYPE C
23
6
24
2
37
30
10
13
1
13
20
270L ZEN & QUIETIS
33
37
23
30
2
31
10
24
1
13
13
20
300L ZEN & QUIETIS
33
37
30
2
31
10
1
13
13
PTEC
2
33
1
31
10
30
37
13
11
TITANIUM+
53
51
3
7
54
51
32
36
19
18
3
43
40
68
27
39
40
36
43
44
34
67
39
12
12
54
11
72
13
R8208329