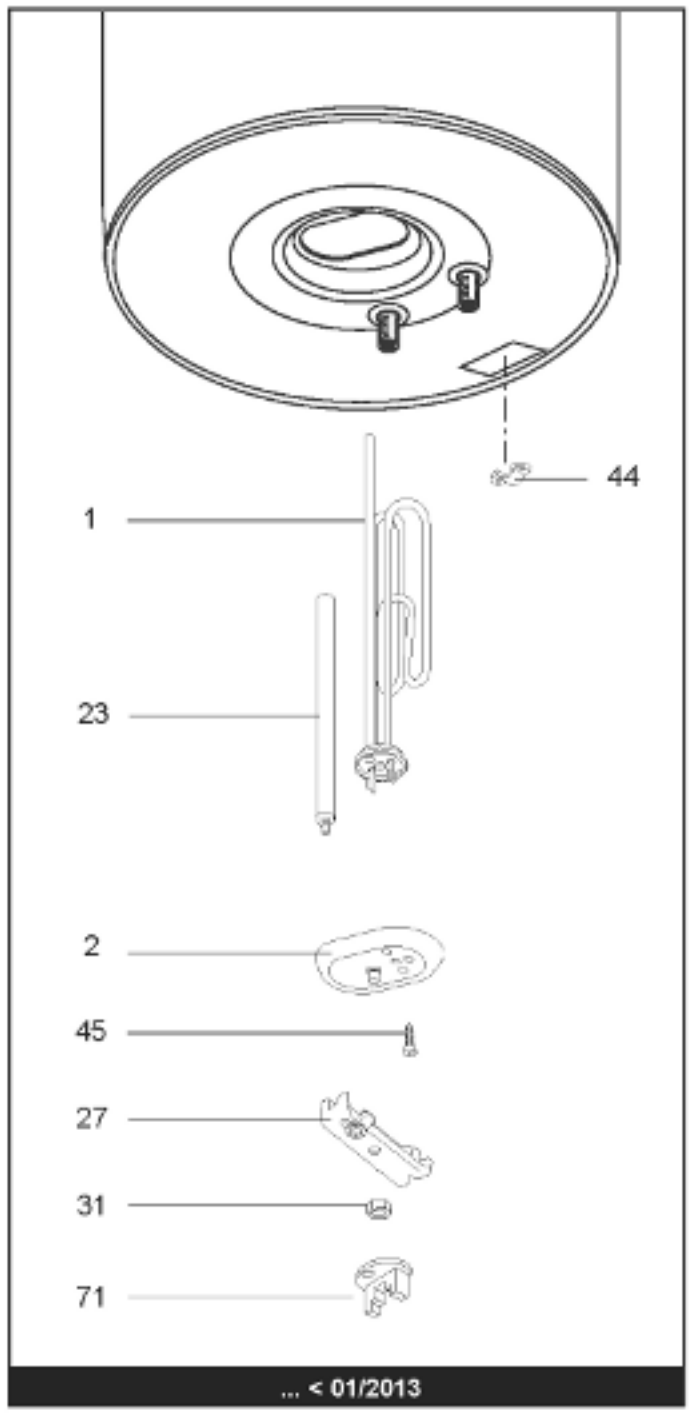
44
1
23
2
45
27
31
71
... < 01/2013

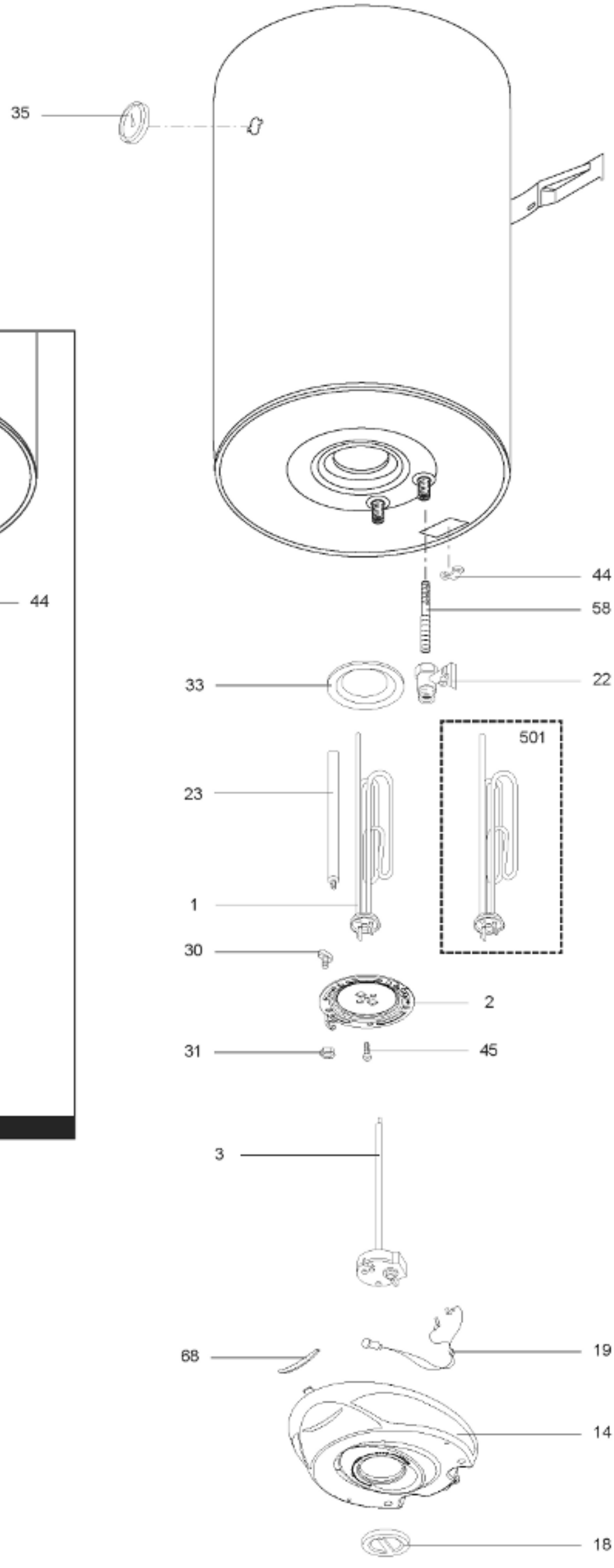
35
44
58
33
22
501
23
1
30
2
31
45
3
68
19
14
18

R8224193