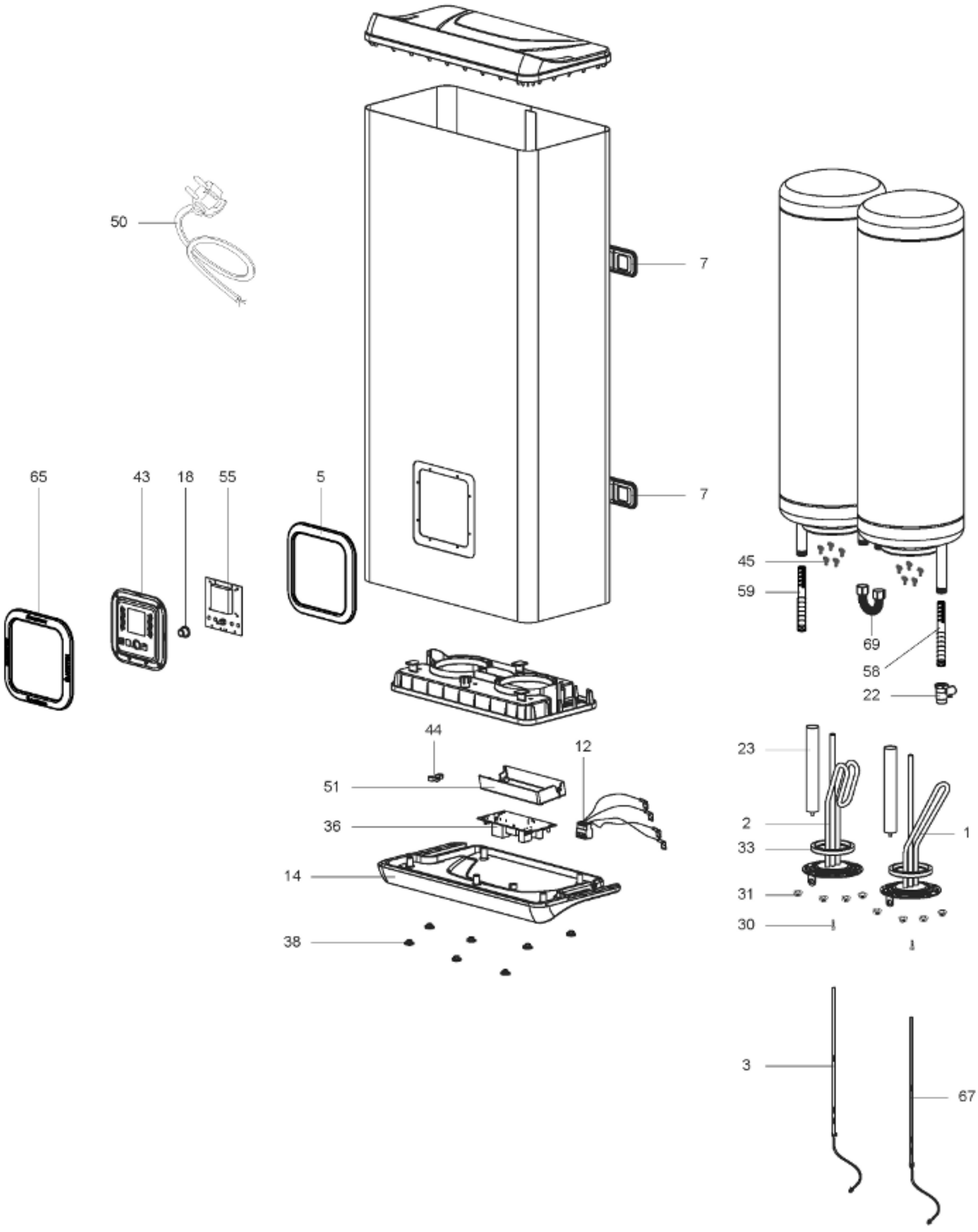

R8223574