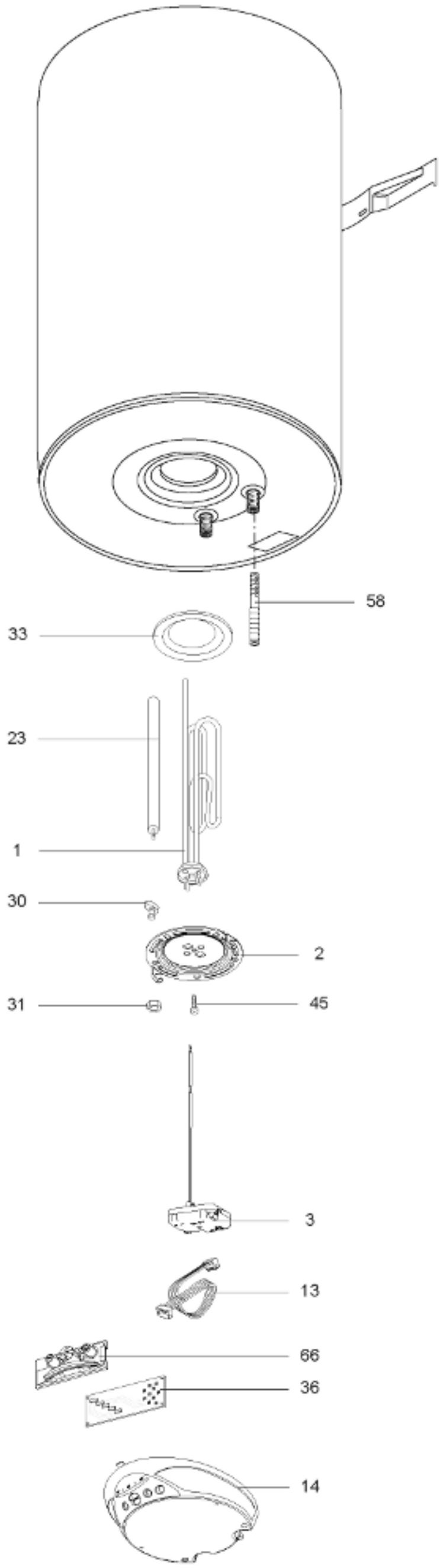

R8224235