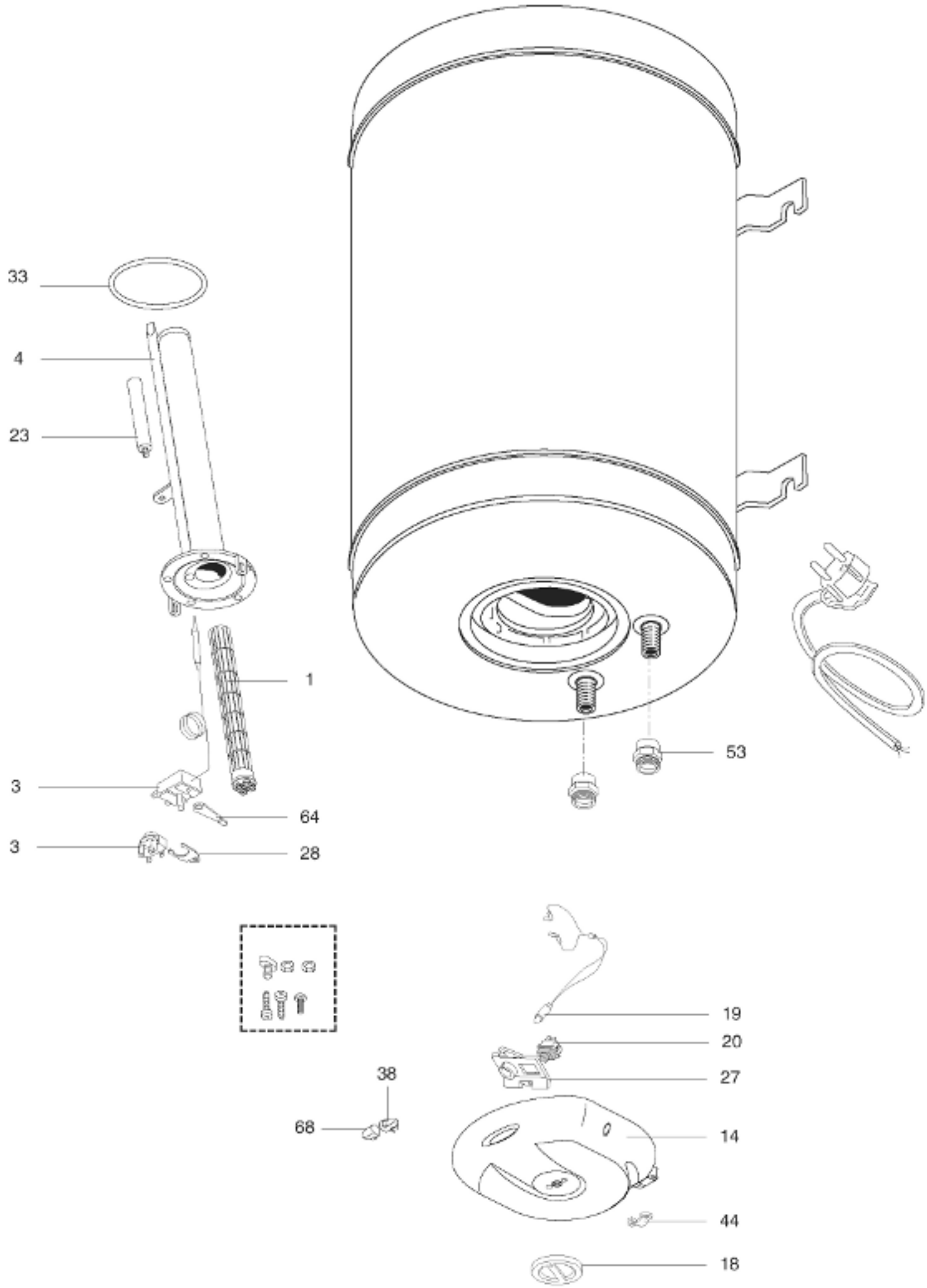

R8220370